

**Eurodone s.r.o.**

GREGORY

www.gregorynabytek.cz

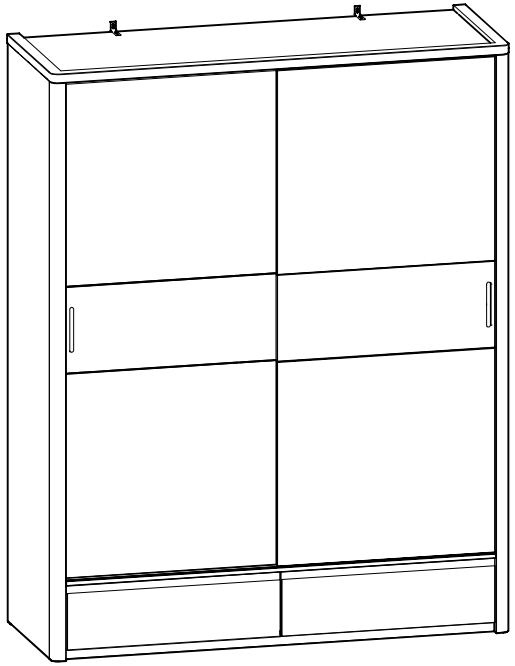

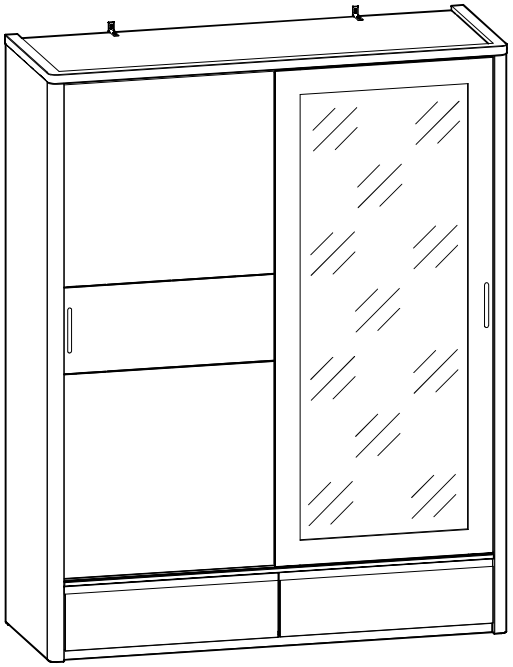

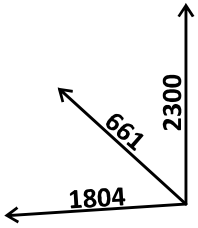


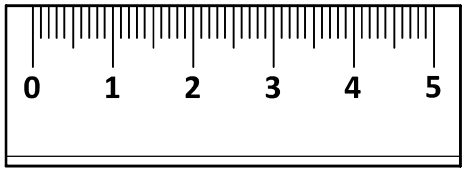


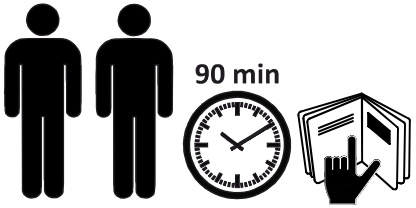


1

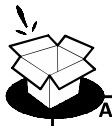

| | | |
|---|---|---|
| A.1 x58<br> 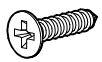 <br>Ø3,5x16 | A.11 x2<br> 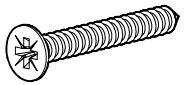 <br>Ø4x30 | A.15 x2<br> 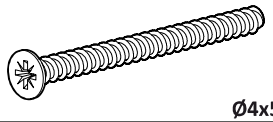 <br>Ø4x50 |
| A.17 x4<br>  <br>Ø3x20 | A.20 x2<br> 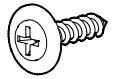 <br>Ø4.2x16 | A.21 x4<br> 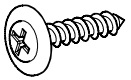 <br>Ø4.2x19 |
| A.53 x8<br>  <br>Ø6.3x9.5 | B.9 x44<br> 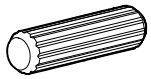 <br>Ø8x30 | B.10 x2<br>  <br>Ø8x50 |
| B.1 x33<br> 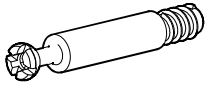 <br>Minifix | B.3 x3<br> 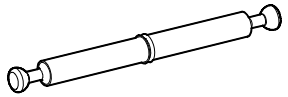 <br>Minifix | B.6 x22<br>  <br>Minifix Ø12x12 |
| B.15 x5<br> 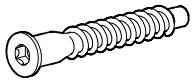 <br>Ø7x50 | B.23 x12<br>  | B.28 x52<br> 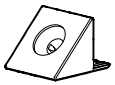 |
| B.30 x2<br> 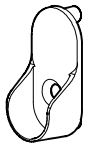 | B.33 x4<br> 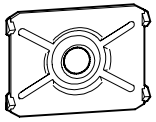 | B.38 x35<br> 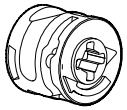 <br>Minifix Ø15x12 |
| B.50 x1<br> 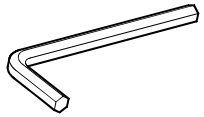 <br>№4 | F.1 x2<br> 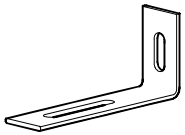 | G.2 x1<br> 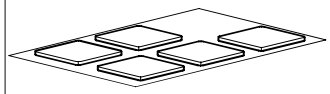 <br>35x35 |
| F.62 x2<br> 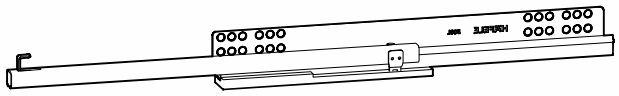 <br>L=500 | | |
| F.63 x2<br> 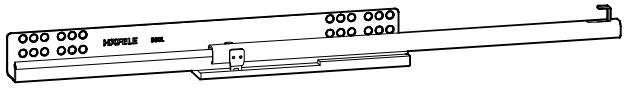 <br>L=500 | G.26 x2<br>  <br>L=1920 | |

2

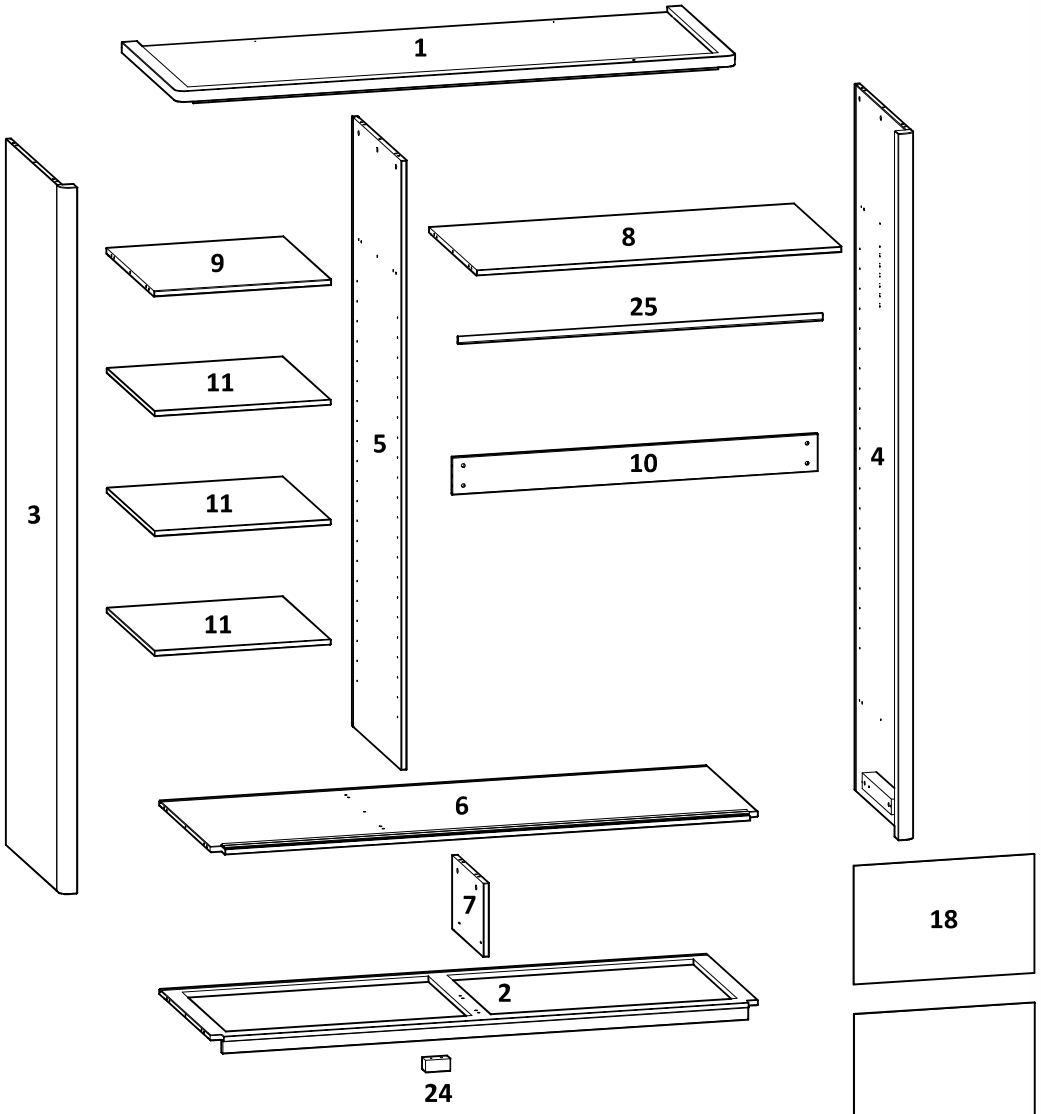


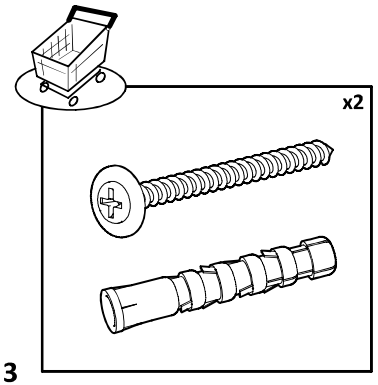


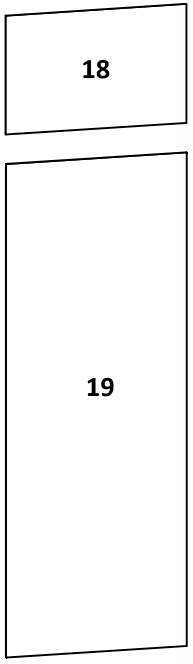


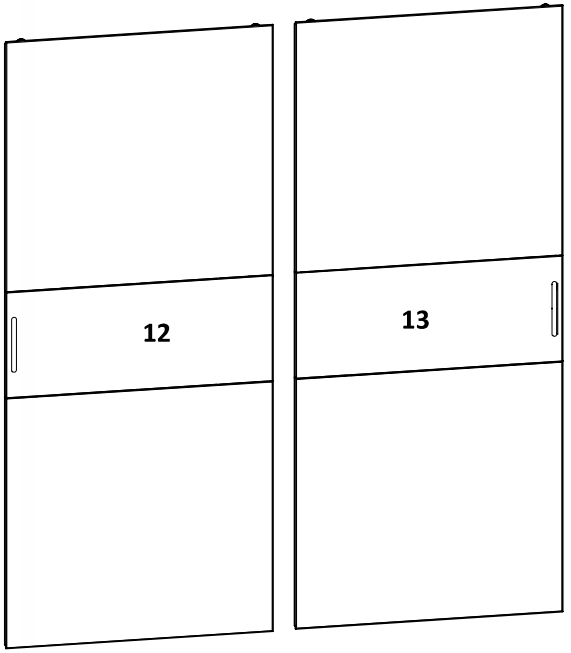


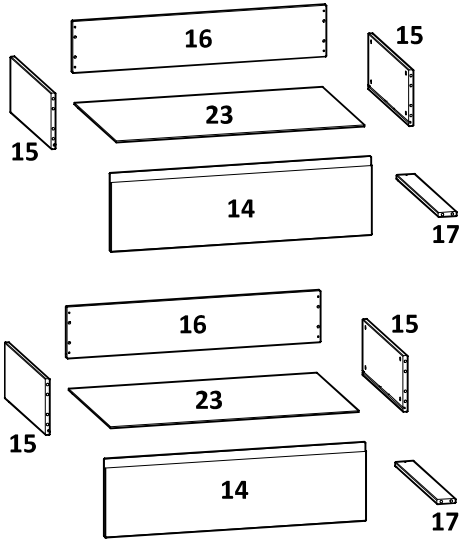


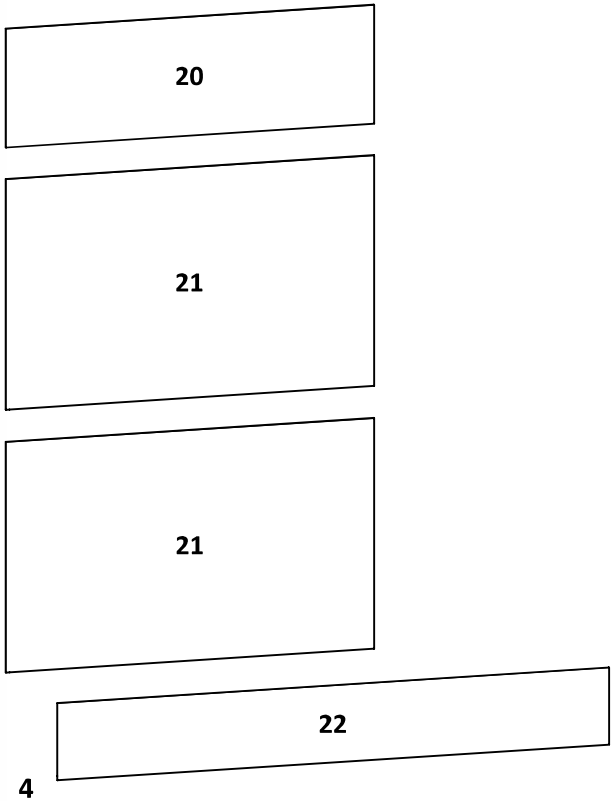


| № | | Sizes | Coll |
|---|---|---|---|
| 1 | x1 | 1804x661x36 | |
| 2 | x1 | 1762x640x58 | |
| 3 | x1 | 2264x659x65 | |
| 4 | x1 | 2264x659x65 | |
| 5 | x1 | 1952x593x18 | |
| 6 | x1 | 1762x658x18 | |
| 7 | x1 | 376x236x18 | |
| 8 | x1 | 1174x573xx18 | |
| 9 | x1 | 570x573x18 | |
| 10 | x1 | 1174x120x15 | |
| 11 | x3 | 568x573x18 | |
| 12 | x1 | 1940x854x20 | |
| 13 | x1 | 1940x854x20 | |
| 14 | x2 | 840x250x18 | |
| 15 | x4 | 485x180x15 | |
| 16 | x2 | 816x165x15 | |
| 17 | x2 | 500x60x15 | |
| 18 | x1 | 380x580 | |
| 19 | x1 | 1580x580 | |
| 20 | x1 | 1184x380 | |
| 21 | x2 | 1184x738 | |
| 22 | x1 | 1774x246 | |
| 23 | x2 | 798x505 | |
| 24 | x1 | 80x40x40 | |
| 25 | x1 | 1166x22x16 | |
| | | | |

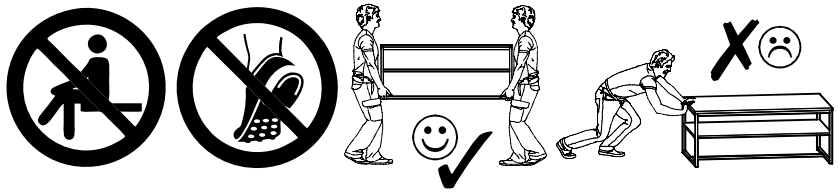

1
x2

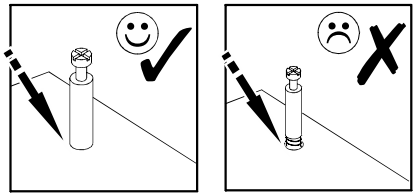

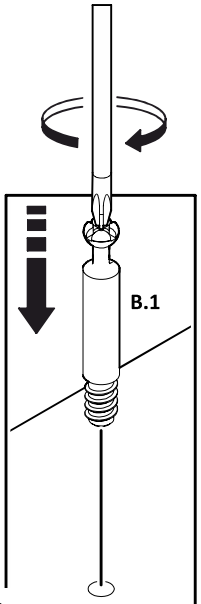


9x

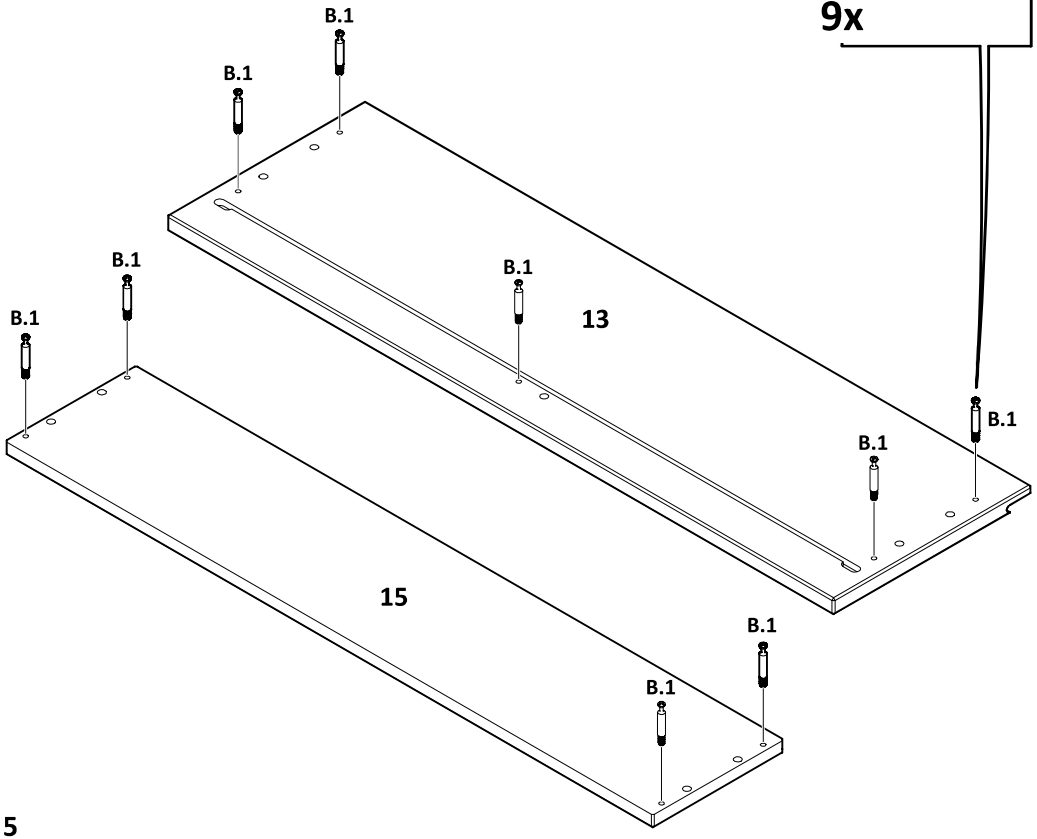




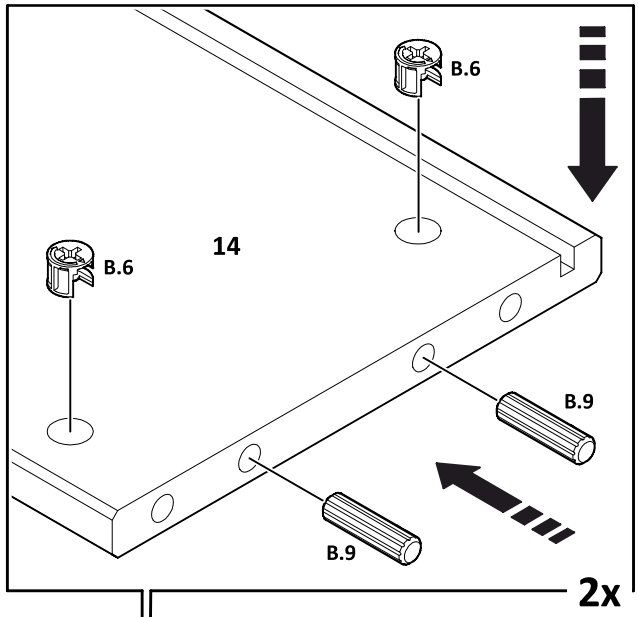


2x

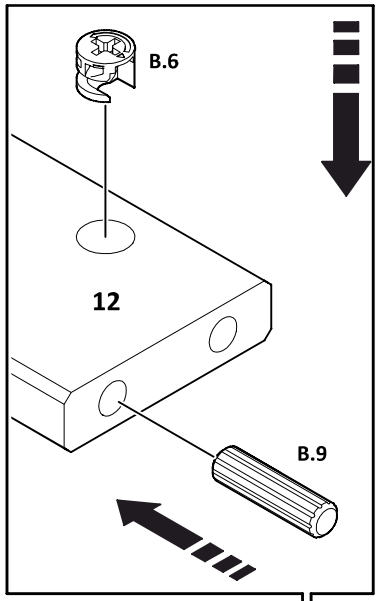


2

x2

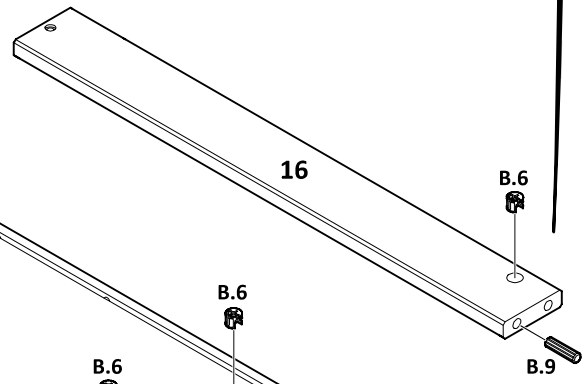


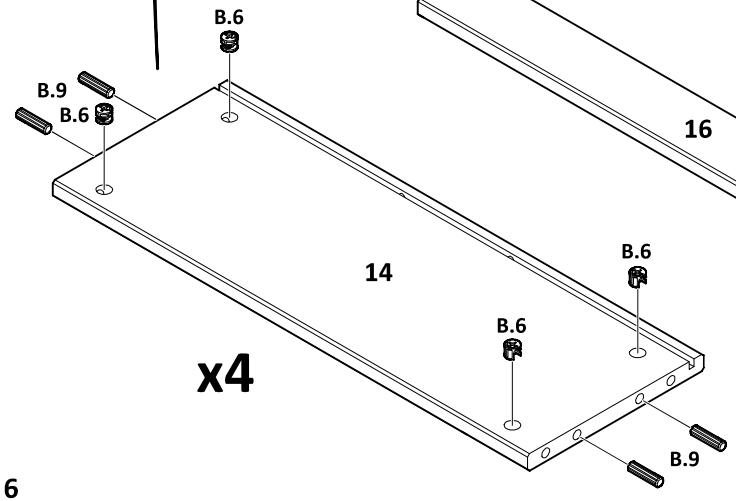


x4

**3**
**x3**

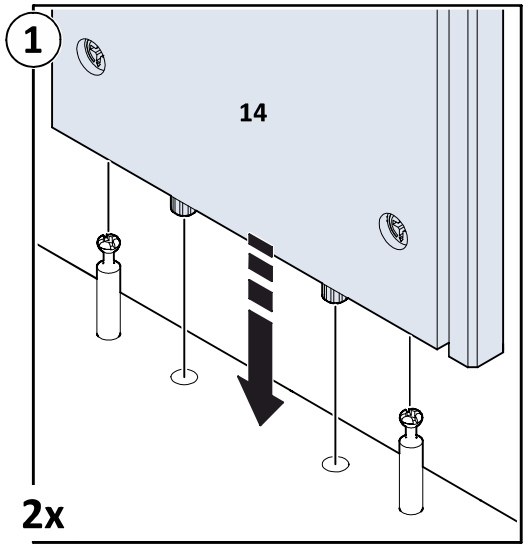


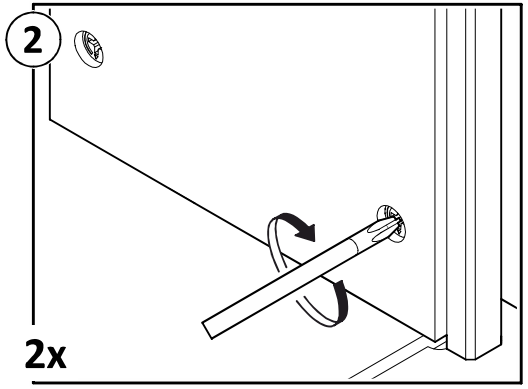


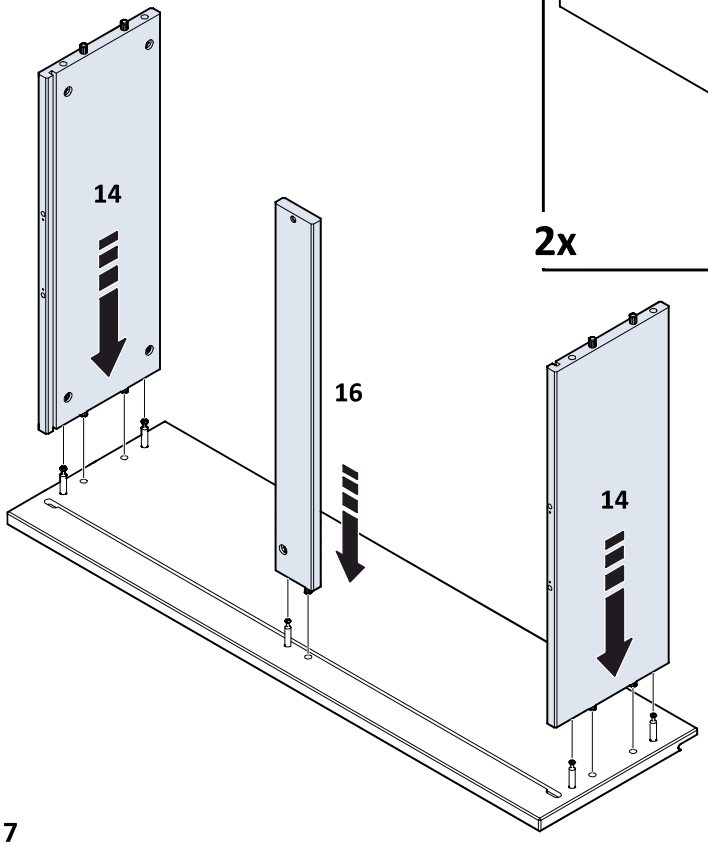




**4**
**x2**

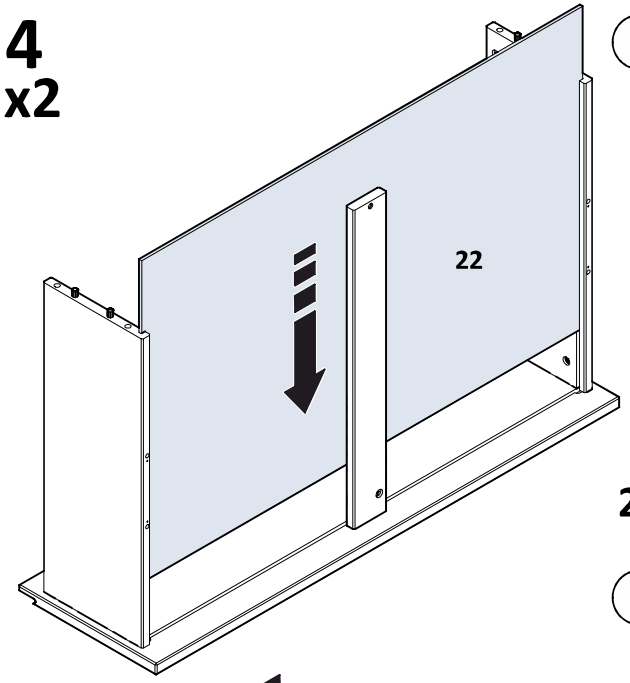


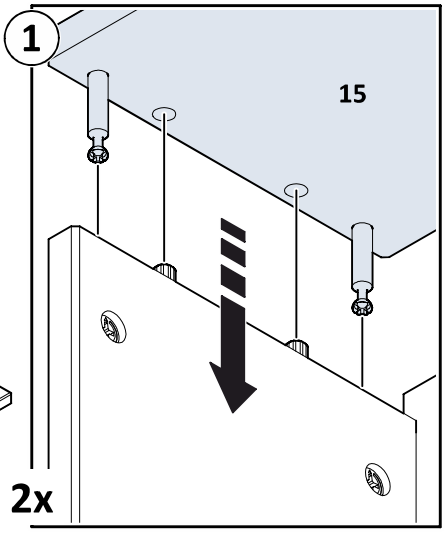


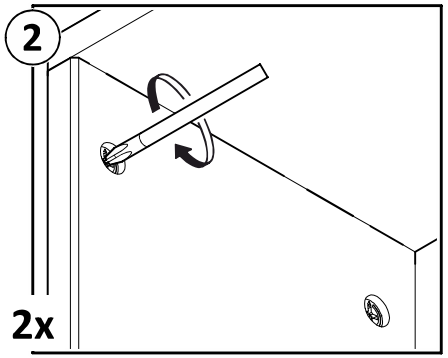


**5**
**x2**

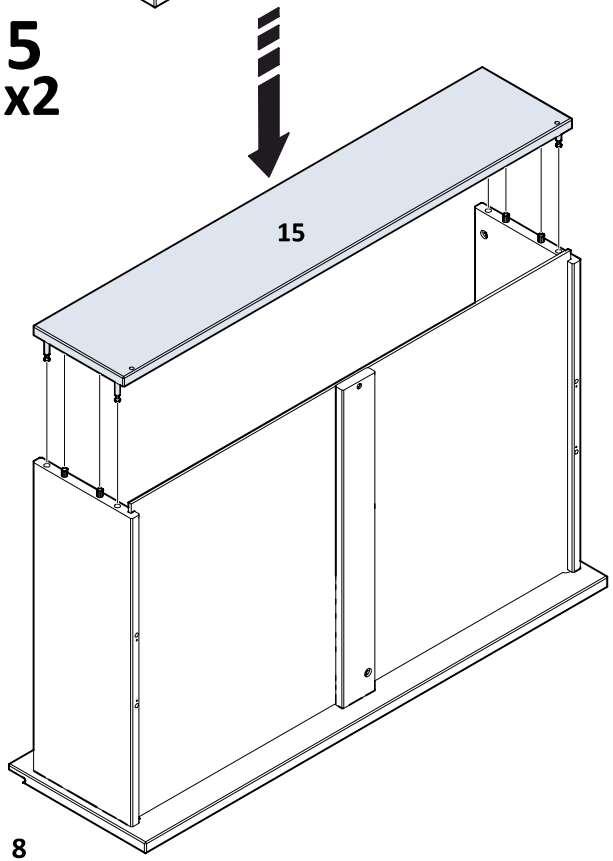

# 6
x3

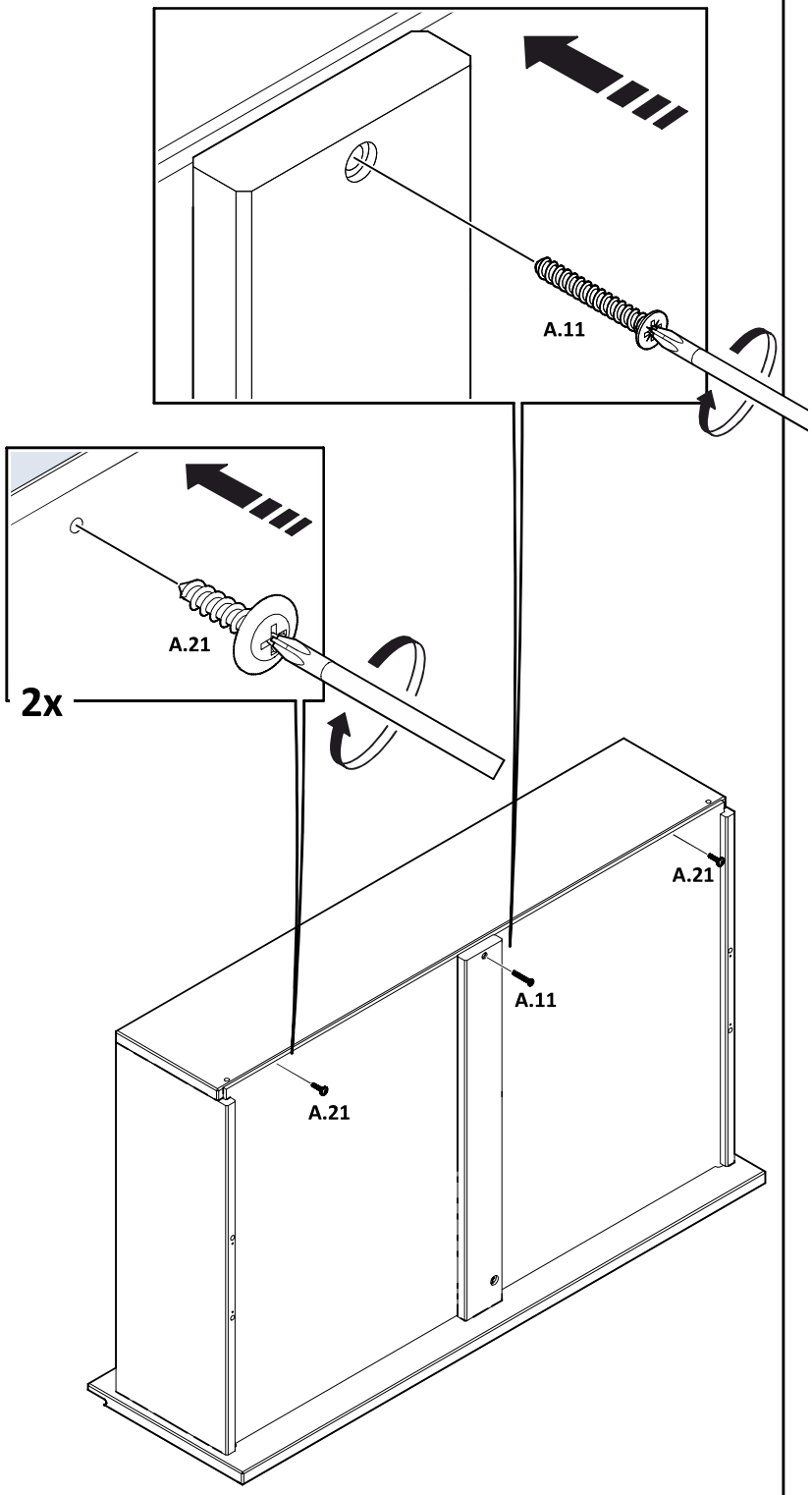
A.11
A.21
2x
A.21
A.11
A.21



# 7

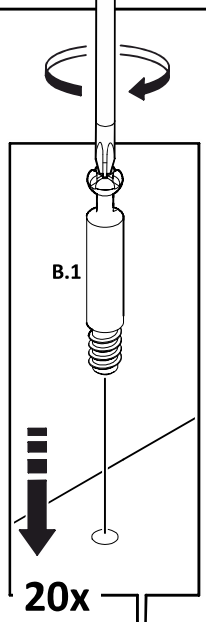
B.1
20x

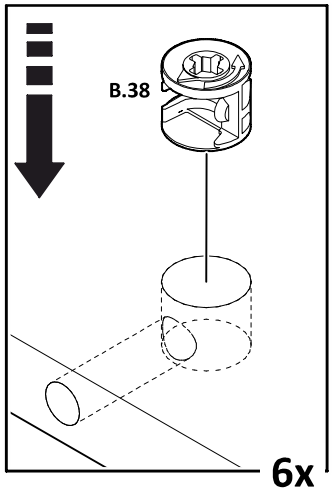
B.38
6x

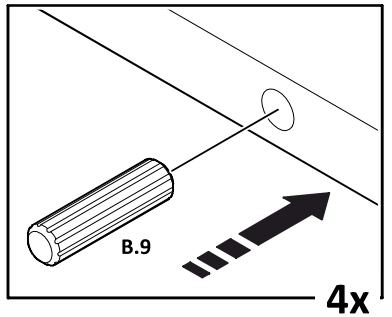
B.9
4x

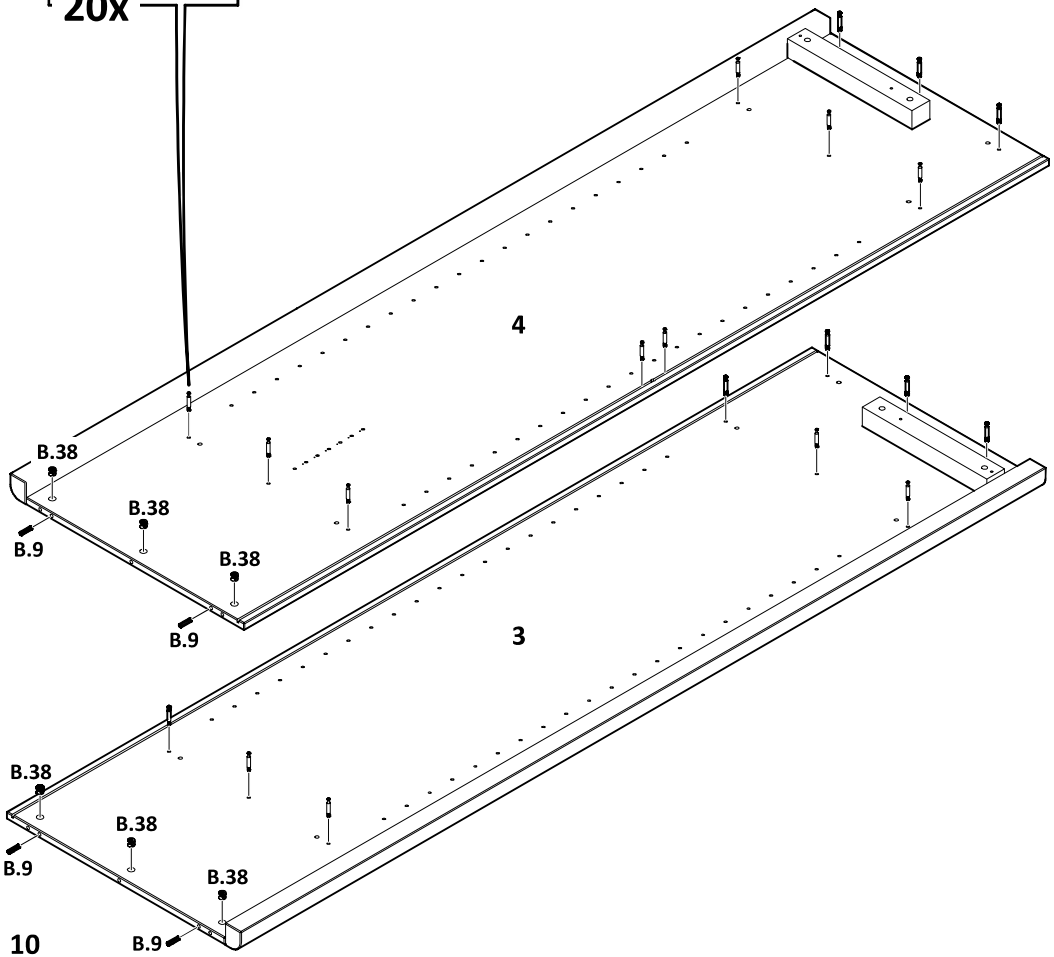
4
B.38
B.38
B.9
B.38
B.9
3
B.38
B.38
B.9
B.38
B.9

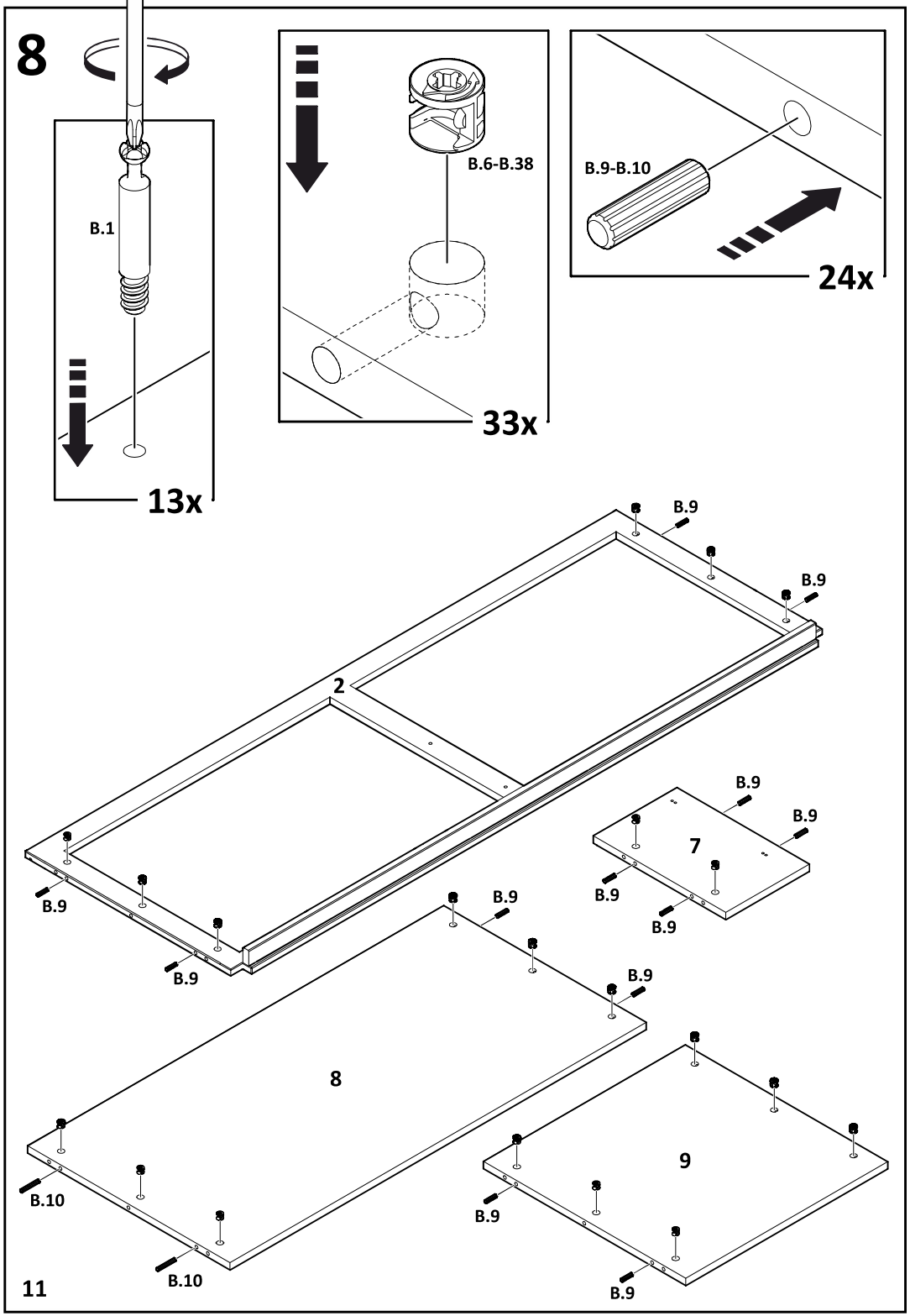
8
B.1
13x
B.6-B.38
33x
B.9-B.10
24x
B.9
2
7
8
9
B.10
11

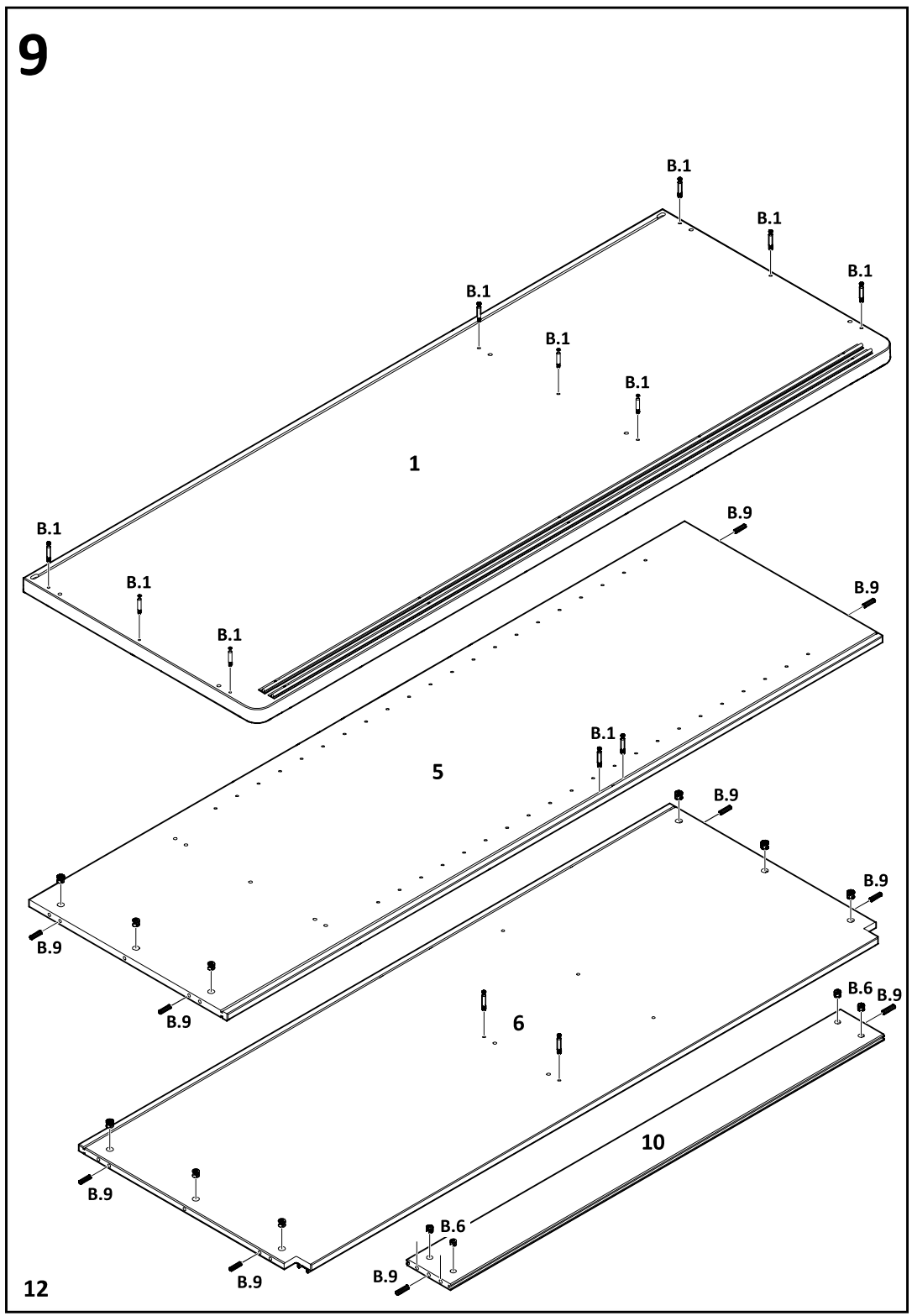
9
B.1
1
B.9
5
6
B.6
10
12

# 10

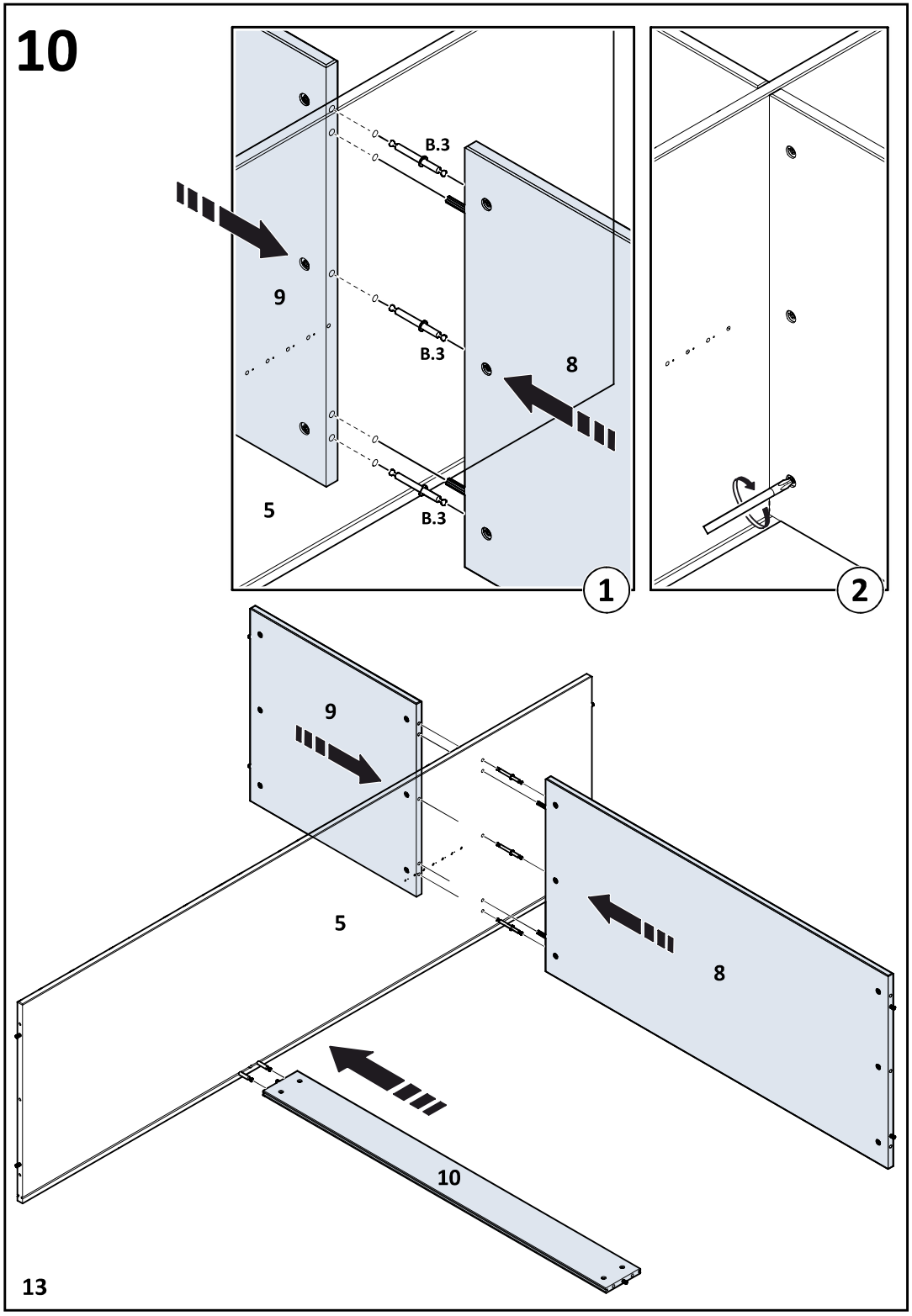




# 11

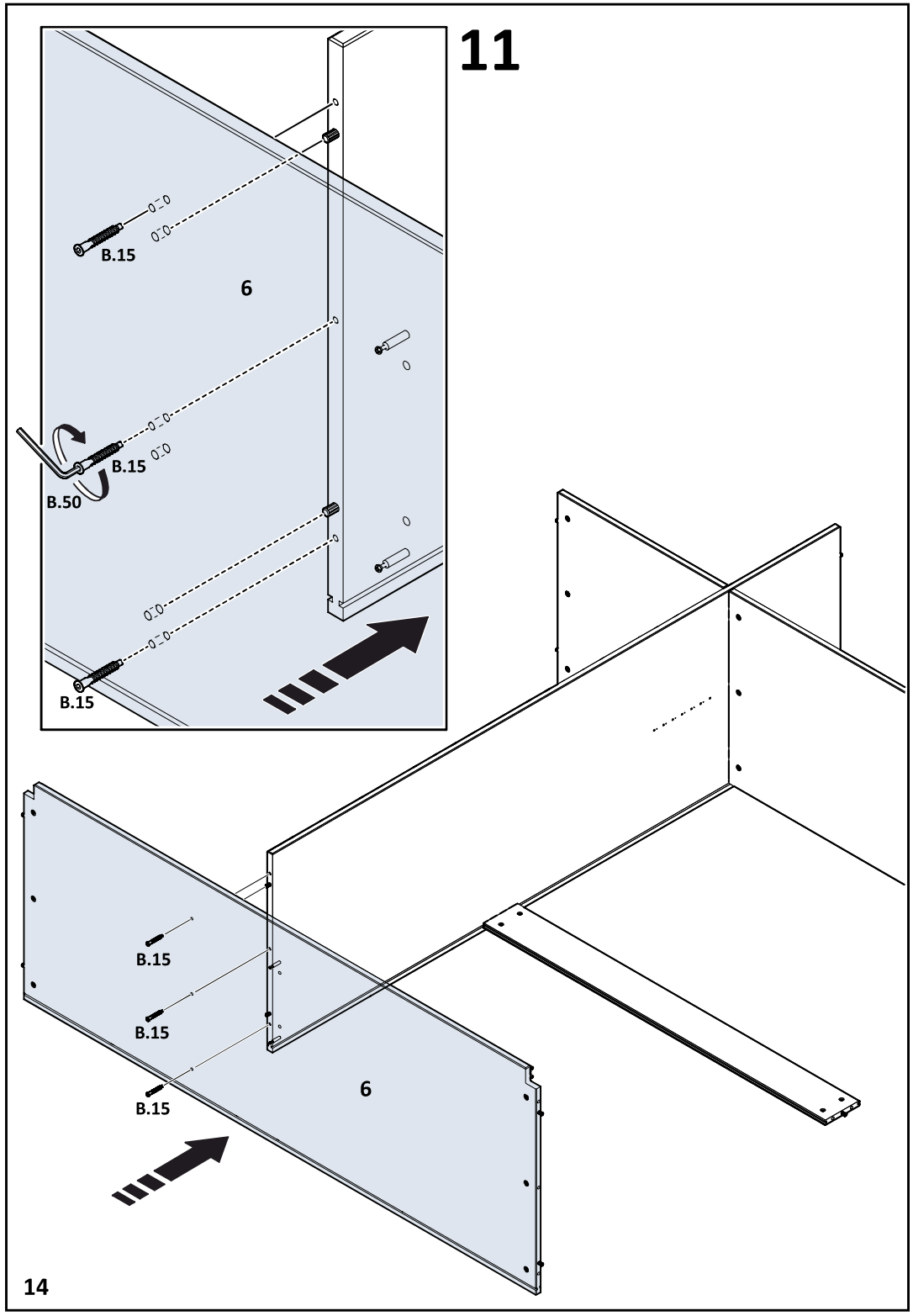

# 12

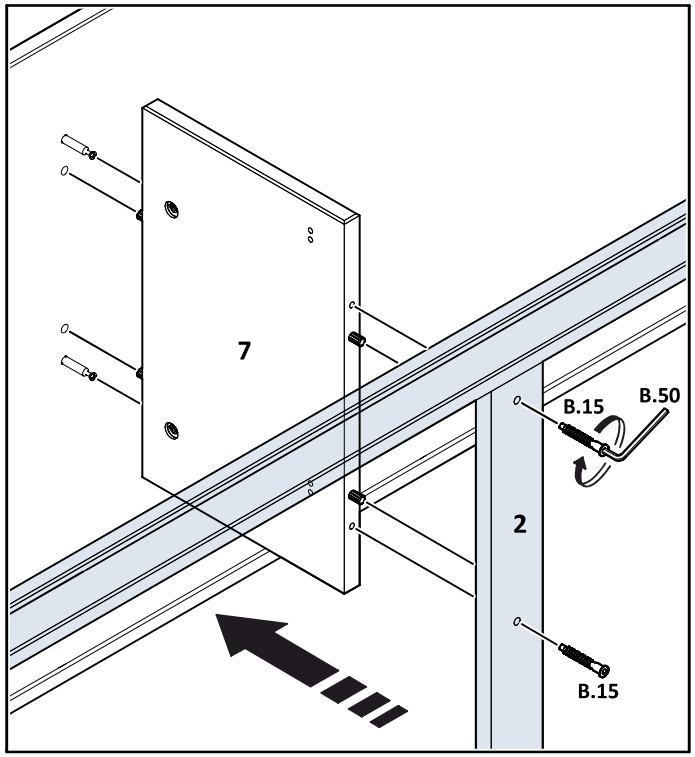


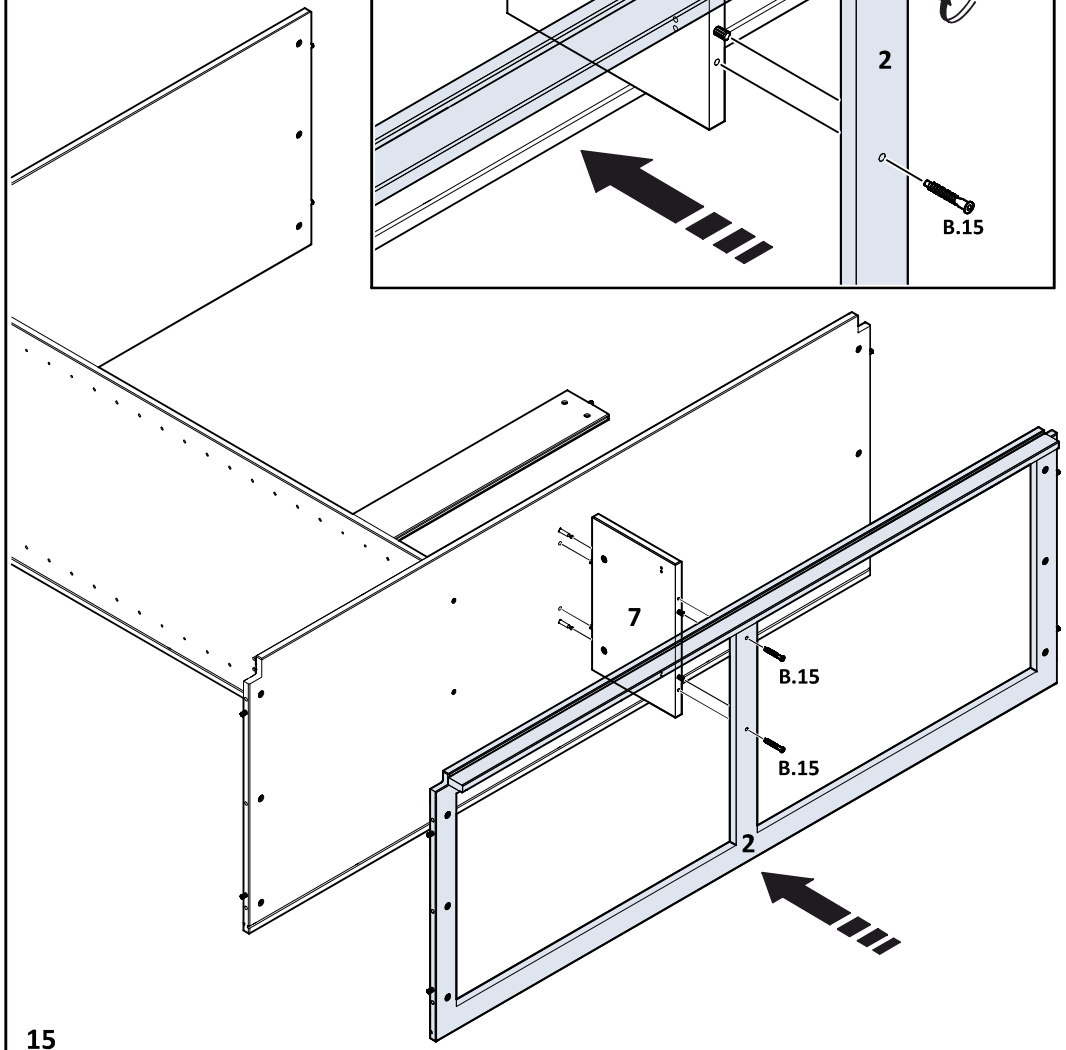




# 13

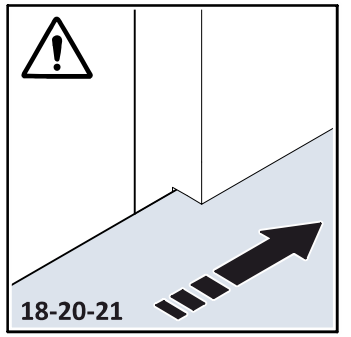


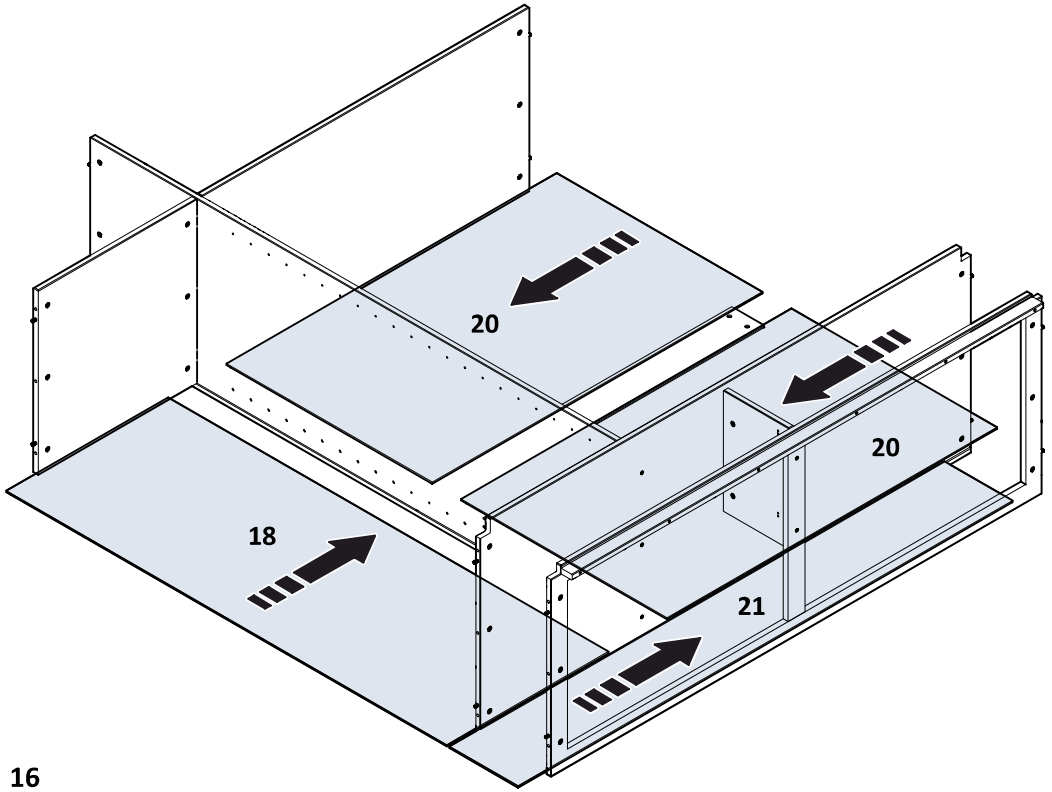

## 14

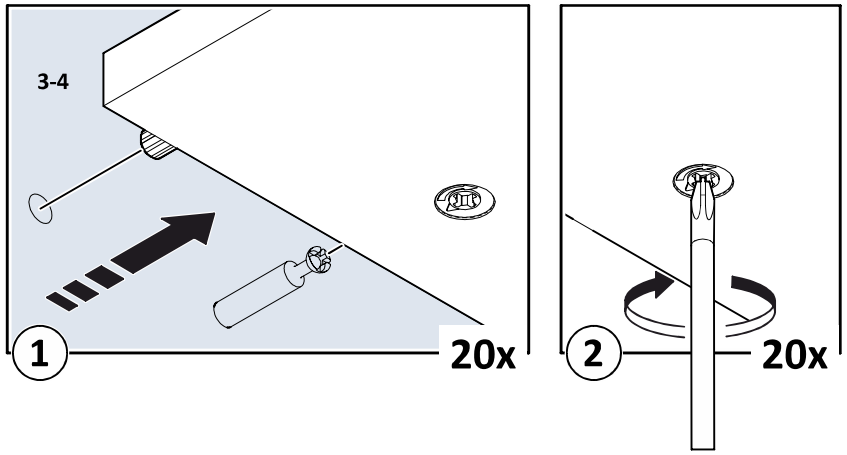


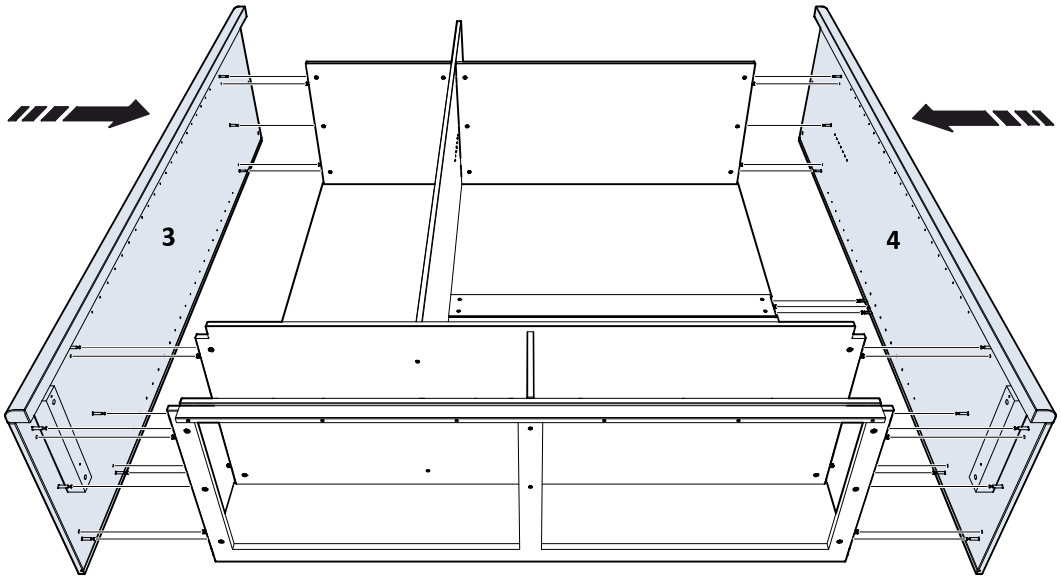




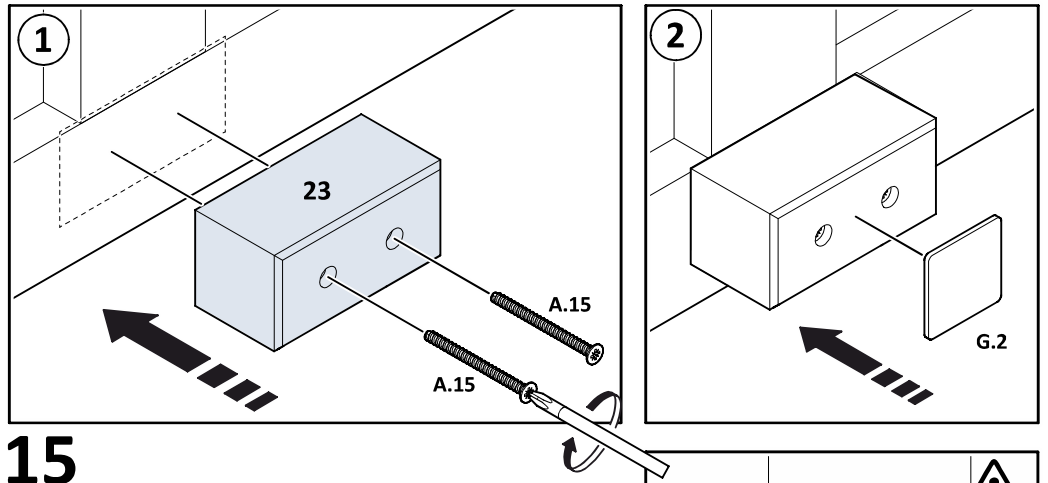


## 15

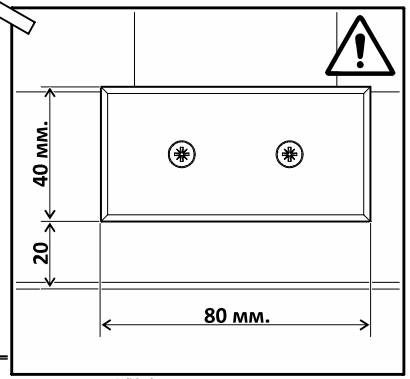


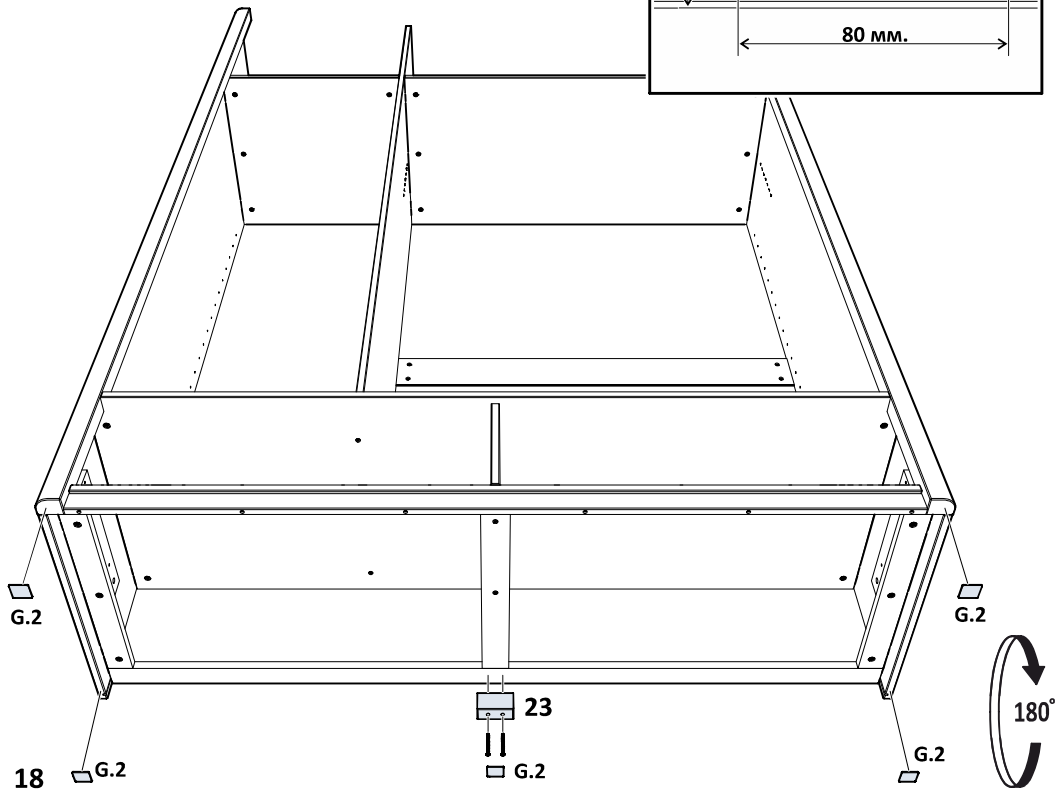

16

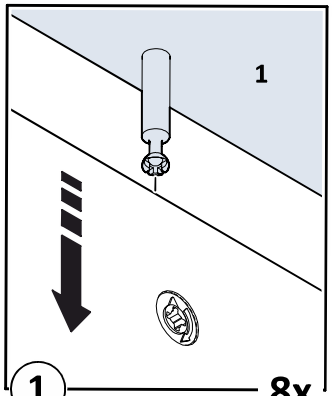


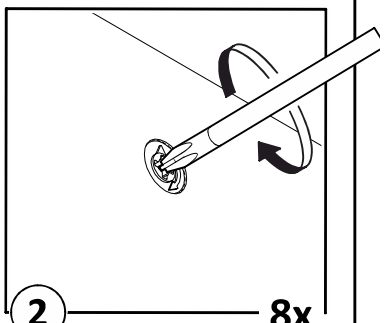


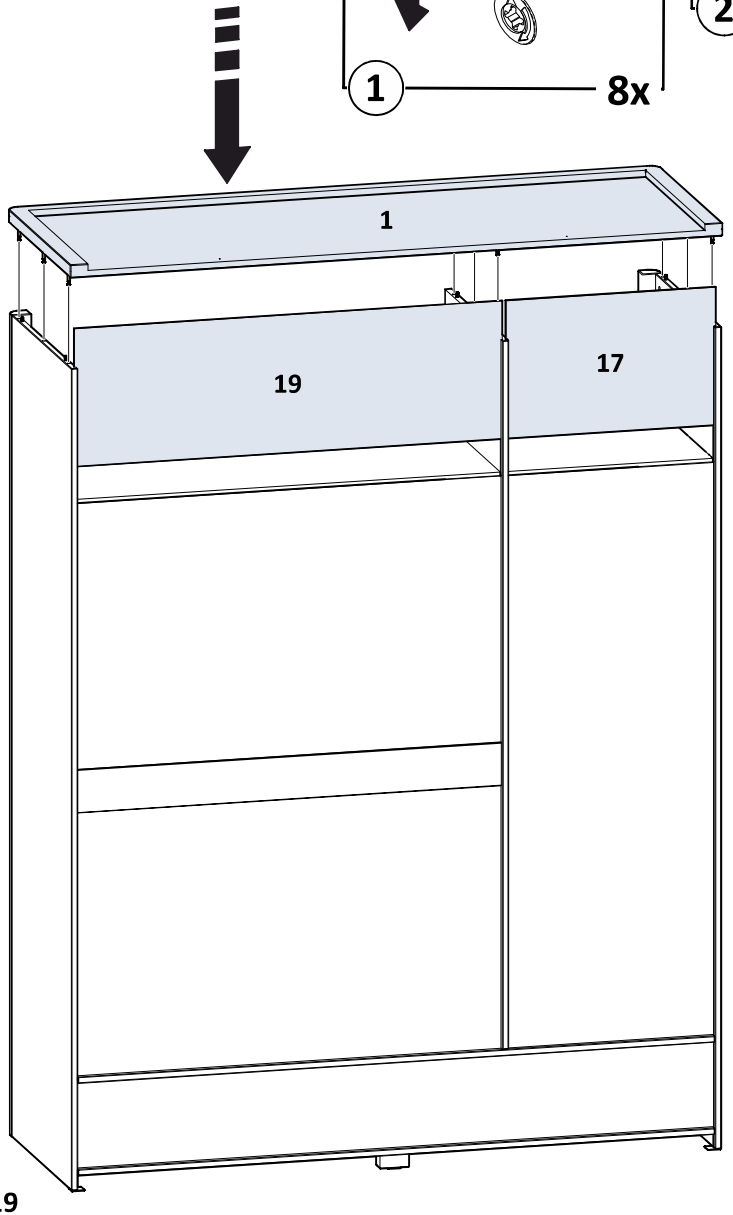




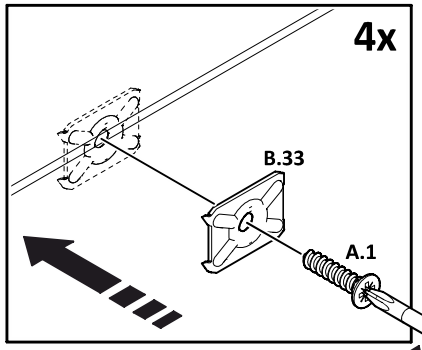


17

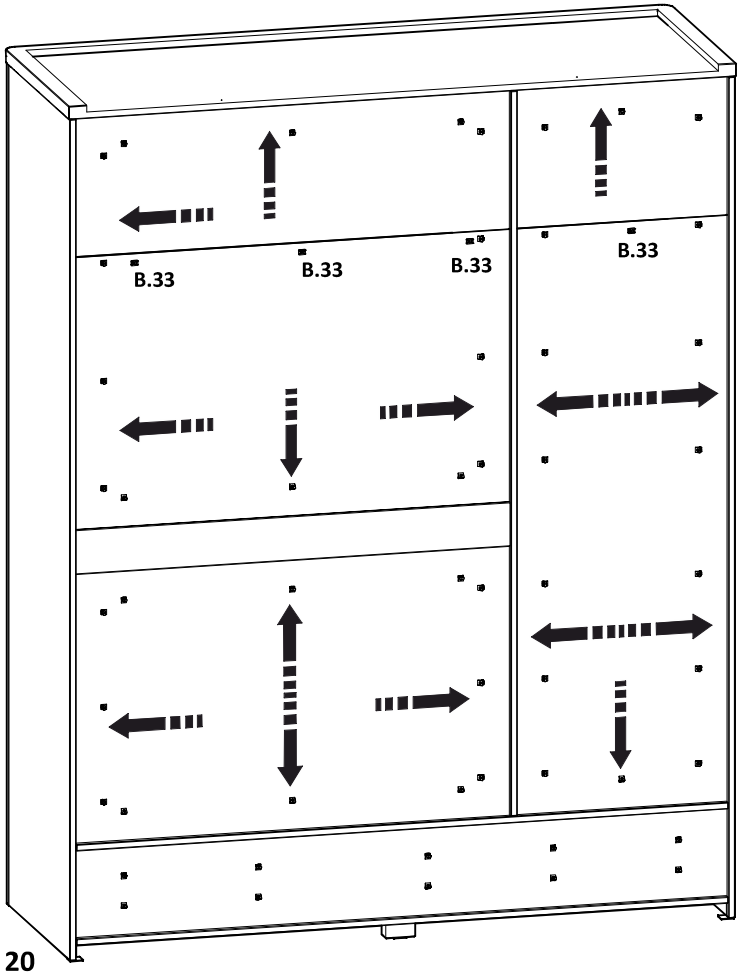


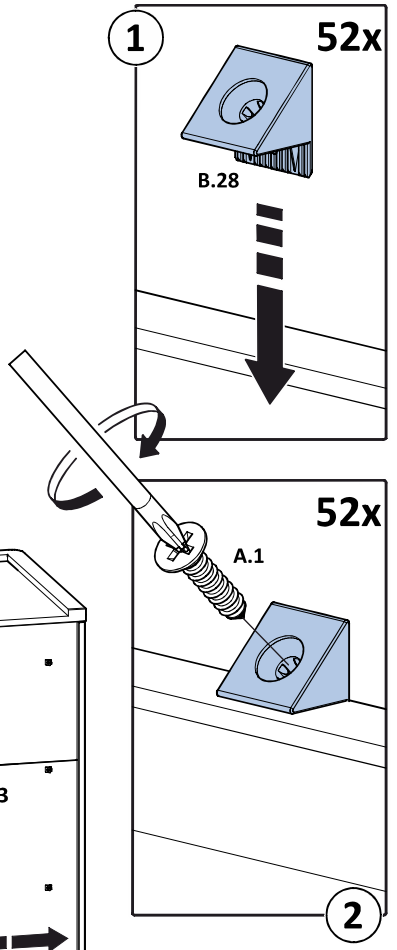

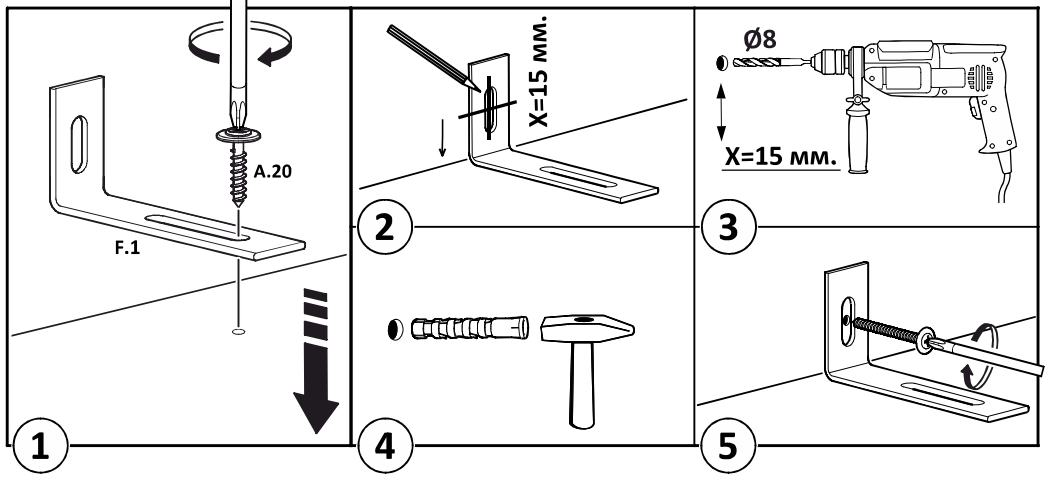
A.20
F.1
X=15 мм.
Ø8
X=15 мм.
1
2
3
4
5

## 18

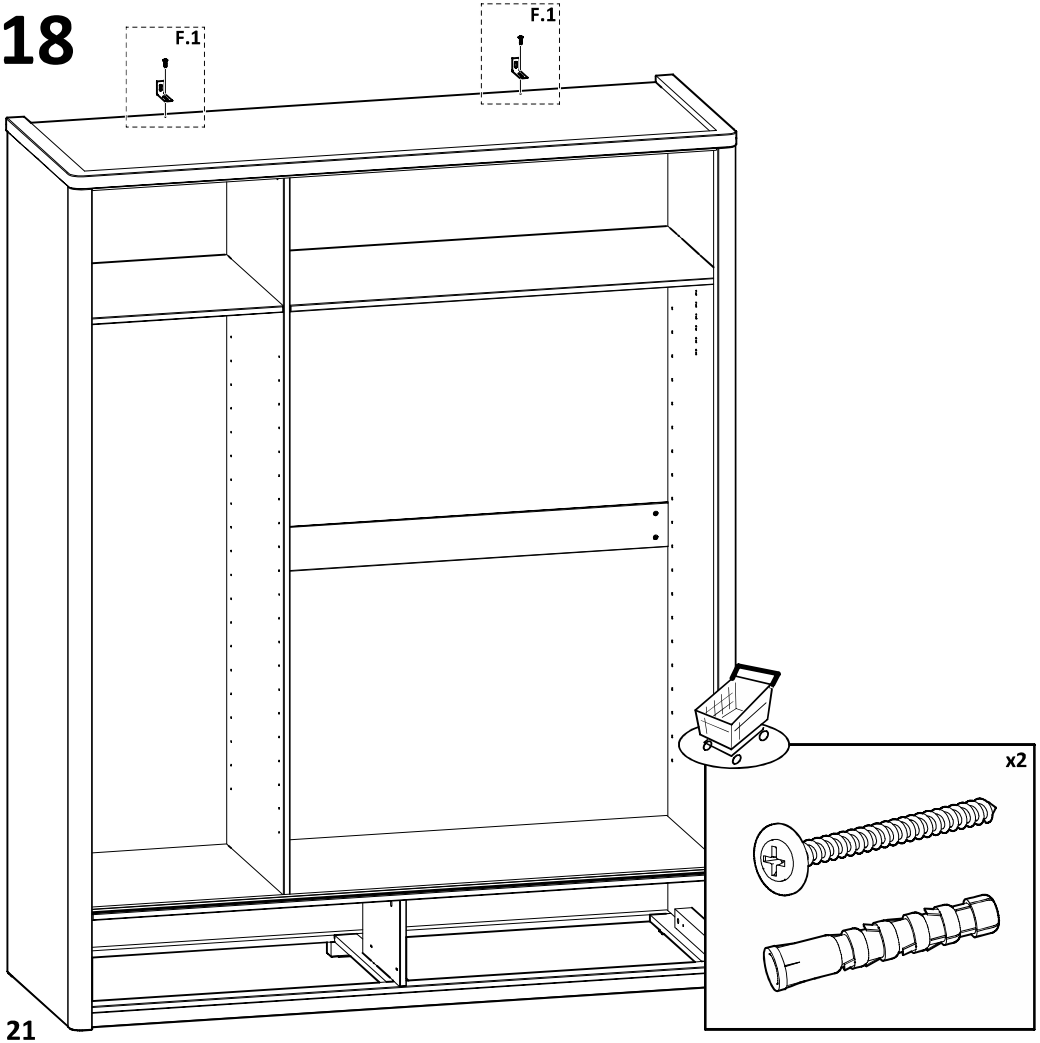
F.1
F.1


x2

21

## 19

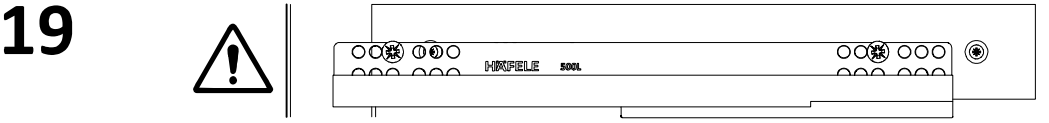
HAFELE

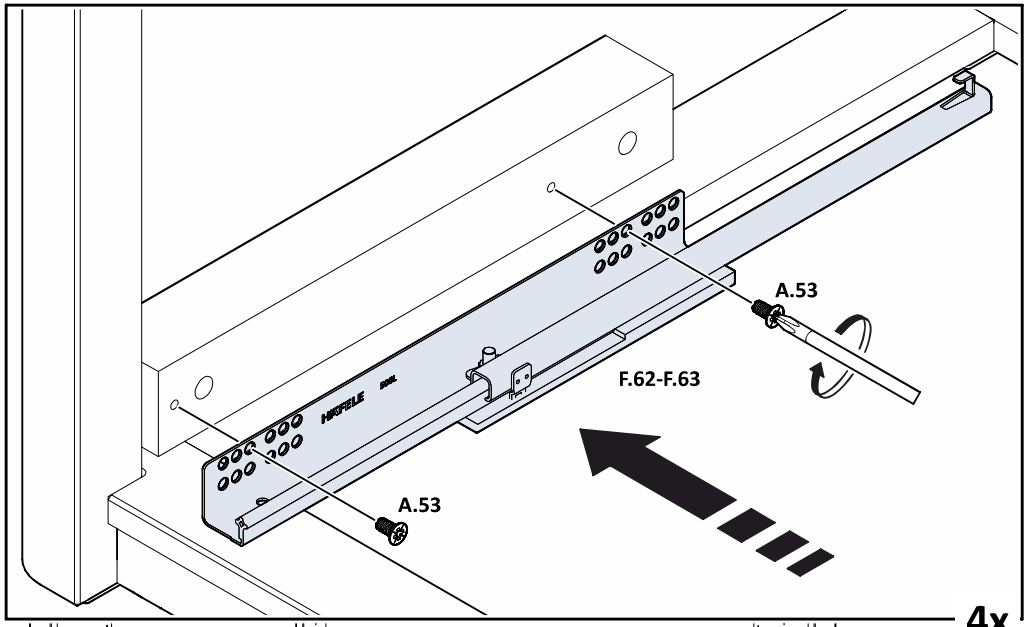
A.53
F.62-F.63
A.53
4x

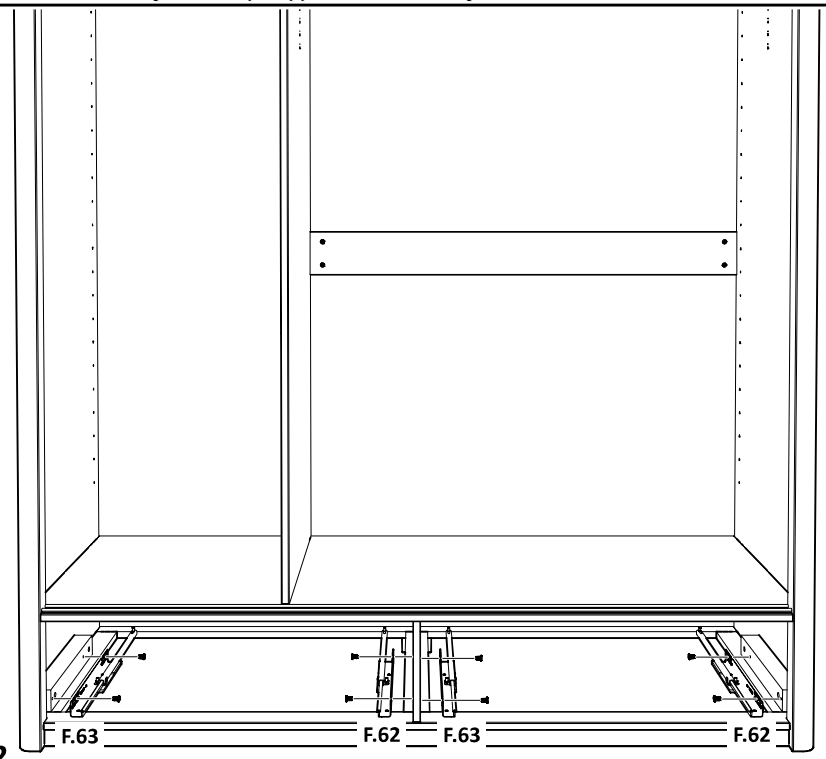
F.63
F.62
F.63
F.62

22

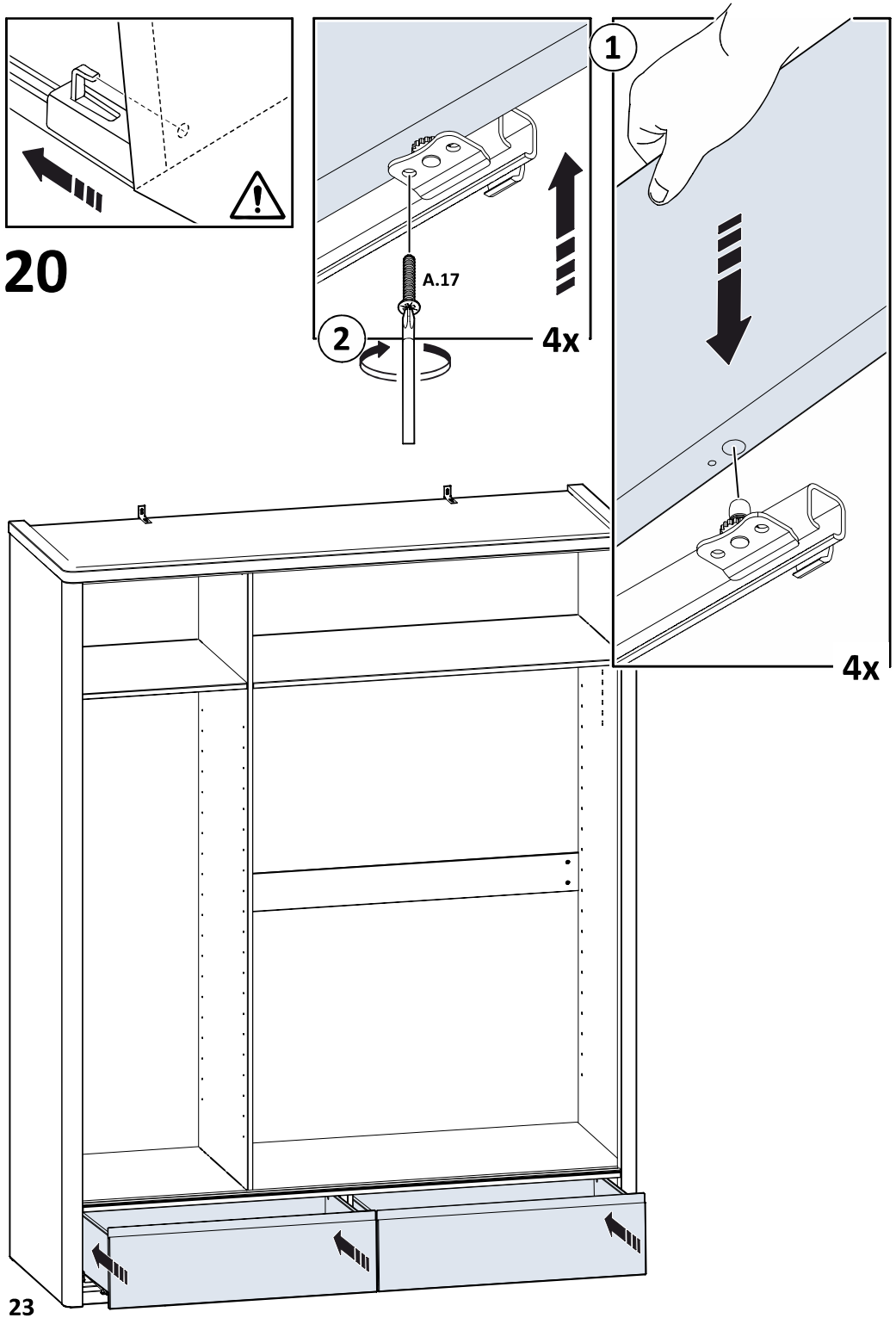
20
A.17
1
2
4x
4x
23

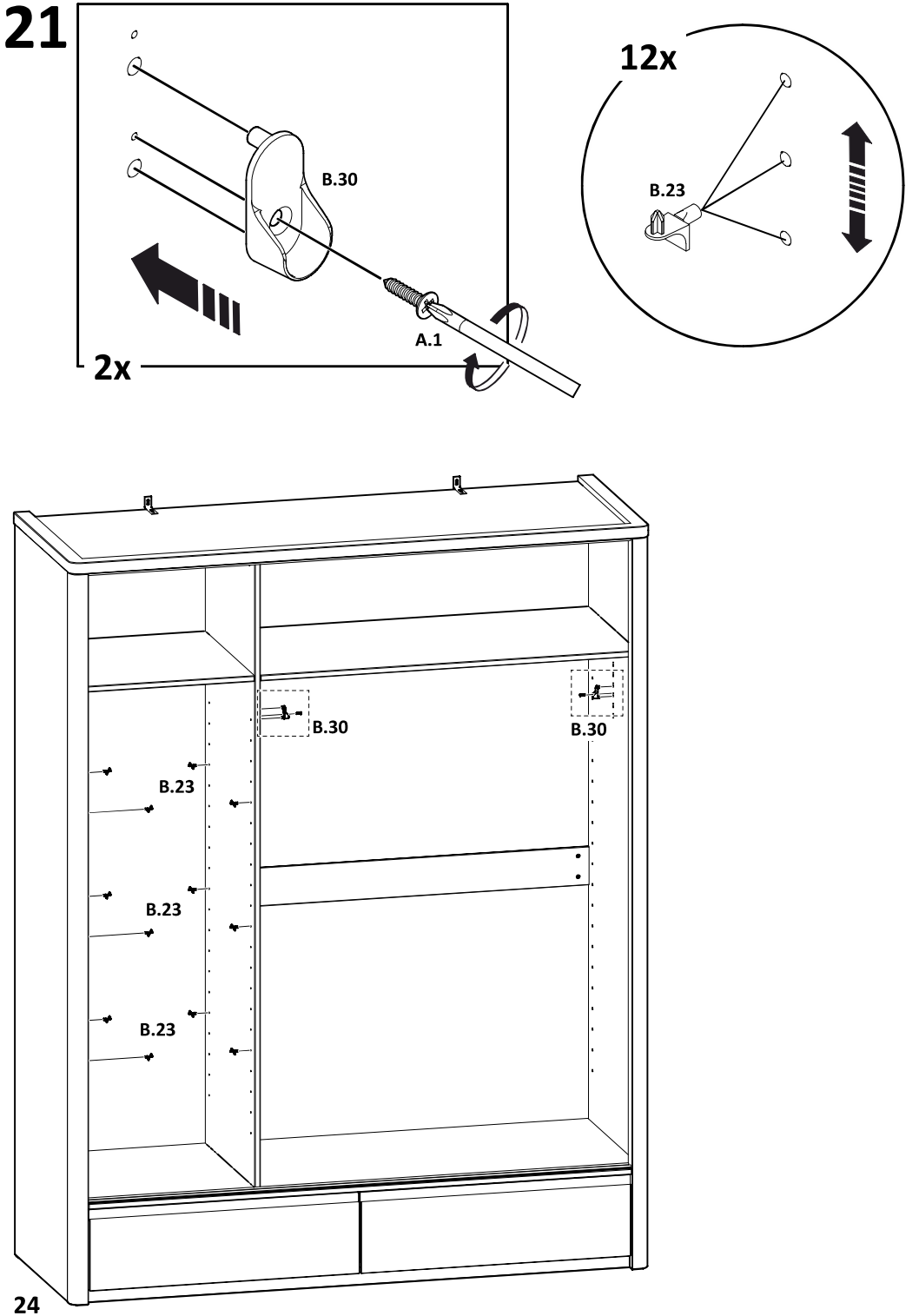
21
B.30
A.1
2x
12x
B.23
B.30
B.30
B.23
B.23
B.23
24

## 22

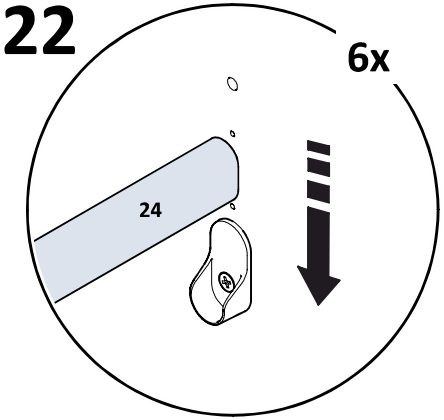
6x
24

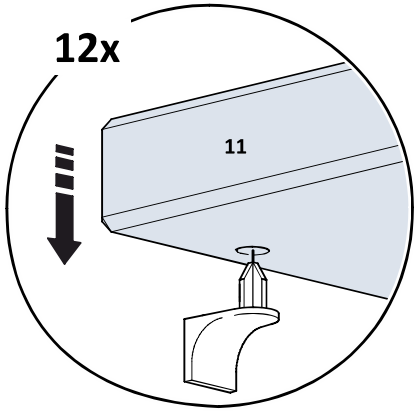
12x
11

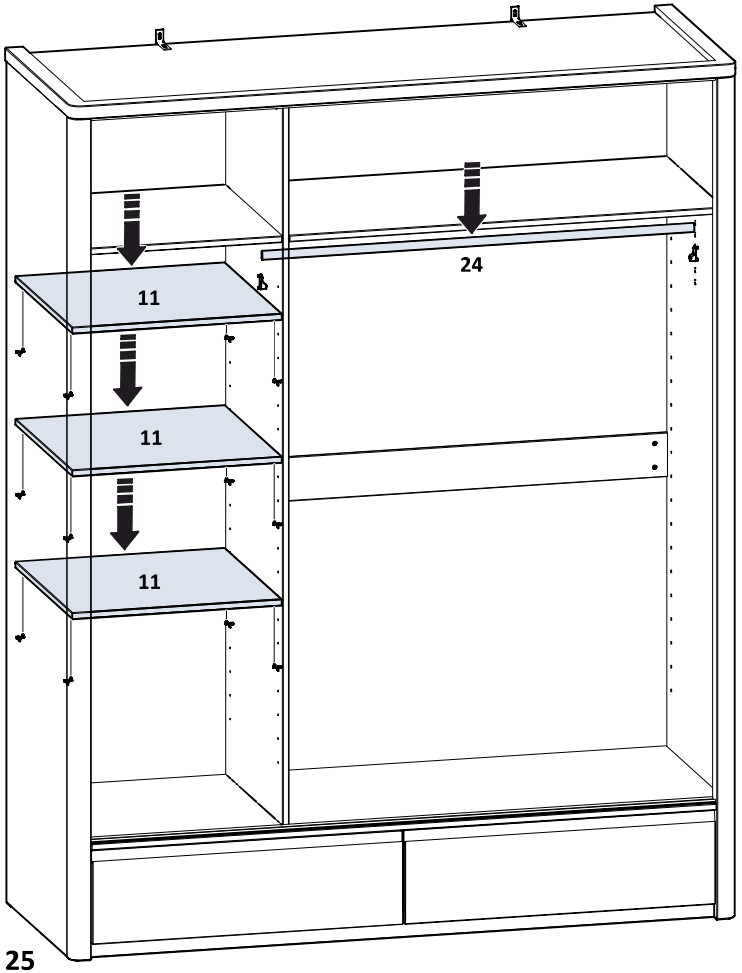
24
11
11
11

25

## 23

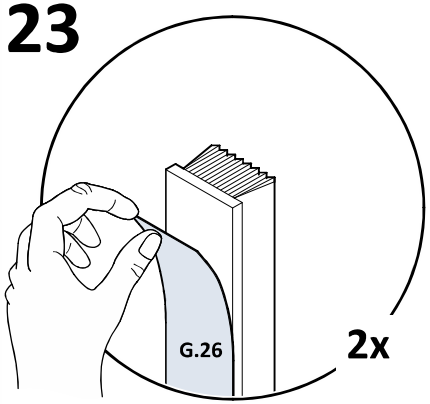
G.26
2x

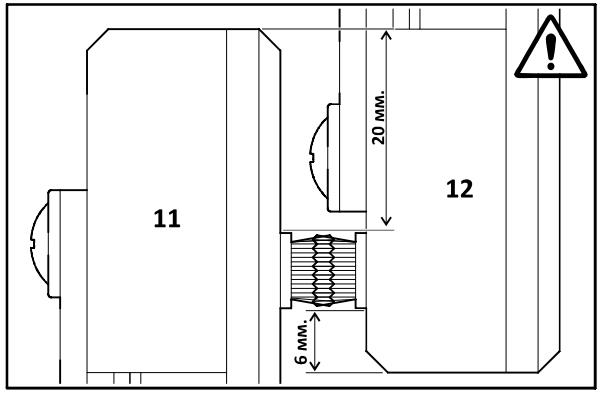
11
12
20 мм.
6 мм.

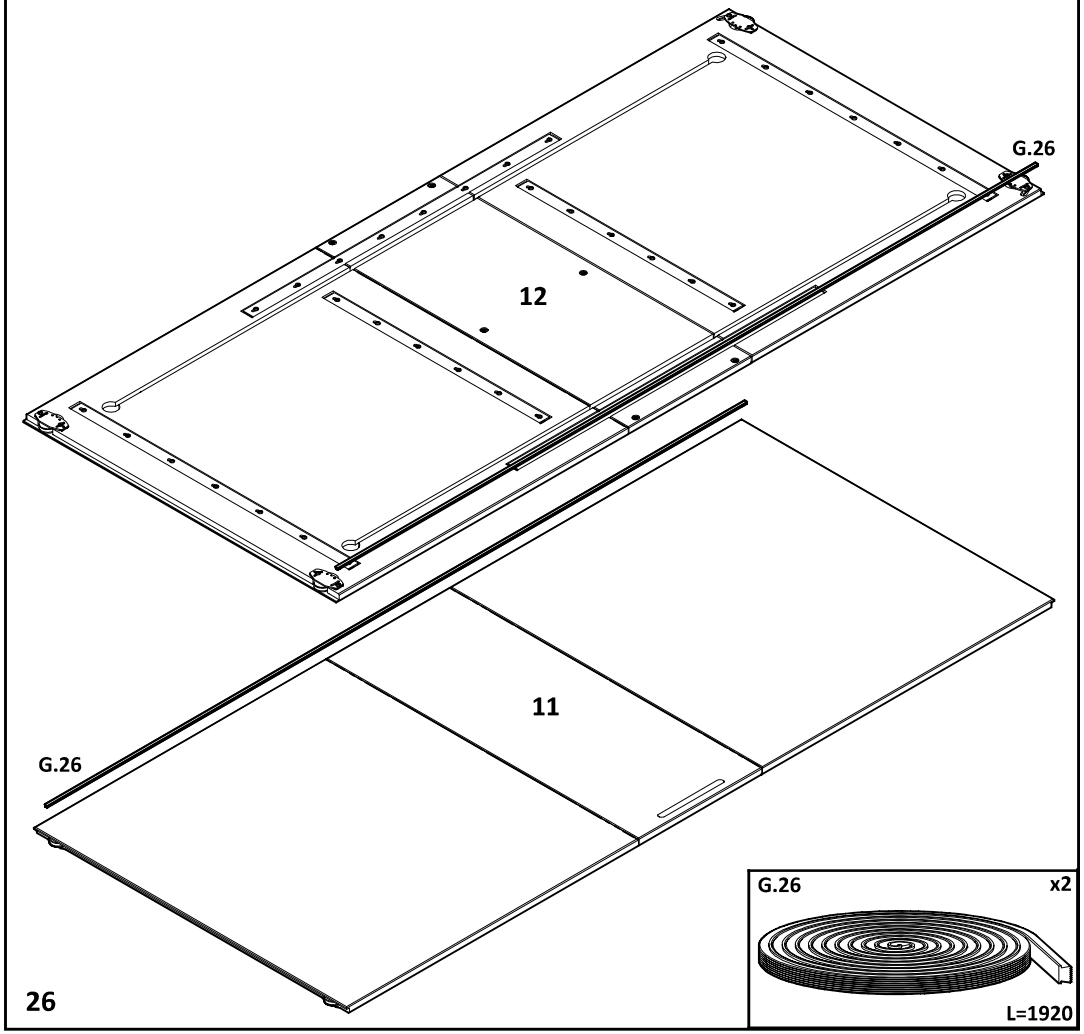
G.26
12
11
G.26


G.26
x2
L=1920

26

# 24

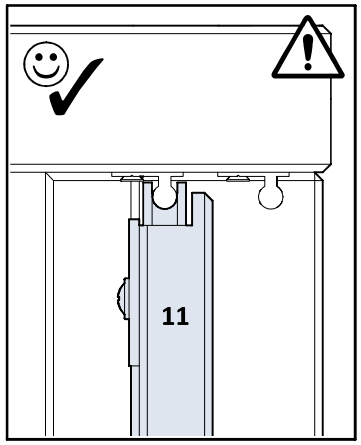


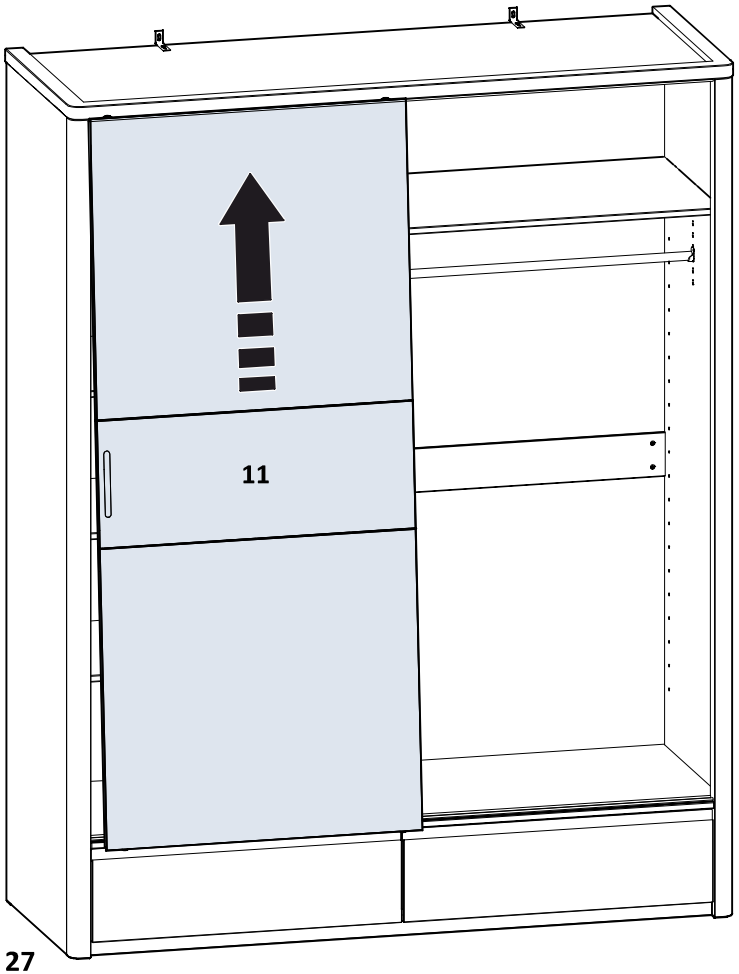




# 25

