

Eurodone s.r.o.

GREGORY

www.gregorynabytek.cz

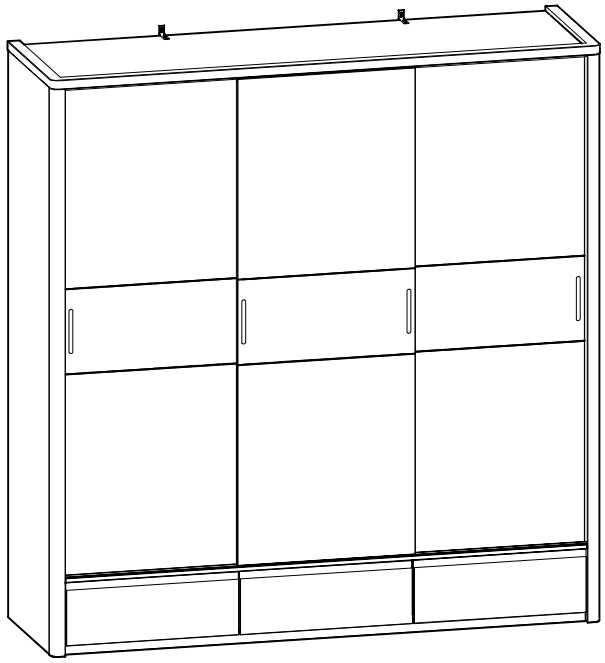

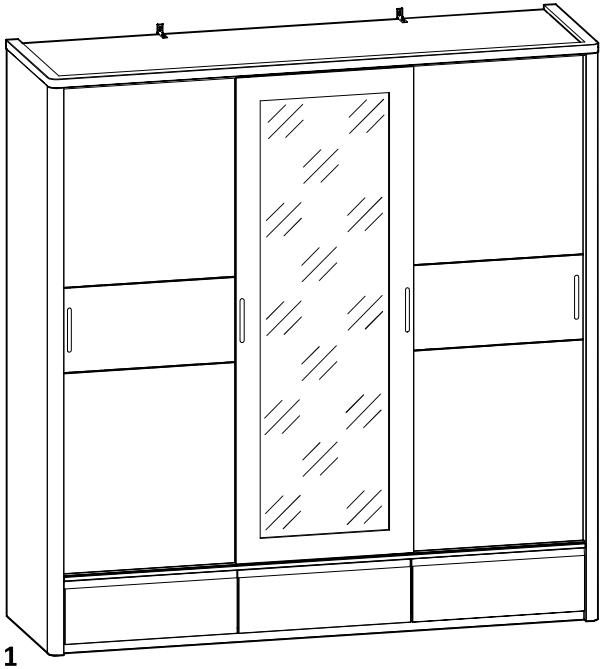

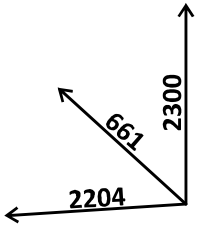

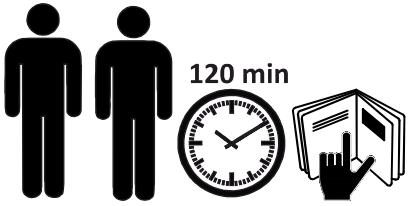



A.1 x72 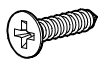 Ø3,5x16	A.11 x3 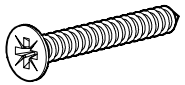 Ø4x30	A.15 x4 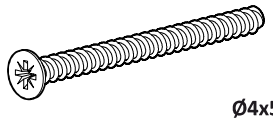 Ø4x50
A.17 x6  Ø3x20	A.20 x2 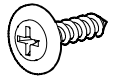 Ø4.2x16	A.21 x6 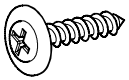 Ø4.2x19
A.53 x12  Ø6.3x9.5	B.9 x61 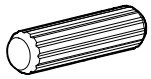 Ø8x30	B.10 x4  Ø8x50
B.1 x69 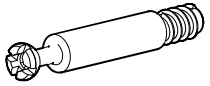 Minifix	B.3 x6 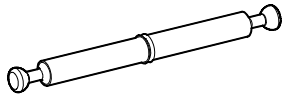 Minifix	B.6 x31  Minifix Ø12x12
B.15 x10 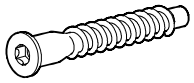 Ø7x50	B.23 x24 	B.28 x66 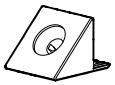
B.30 x2 	B.33 x6 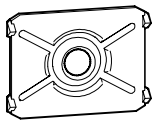	B.38 x46 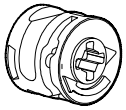 Minifix Ø15x12
B.50 x1 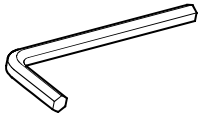 №4	F.1 x2 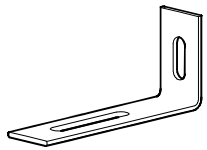	G.2 x1 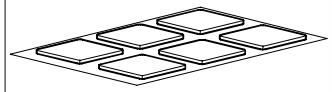 35x35
F.62 x3 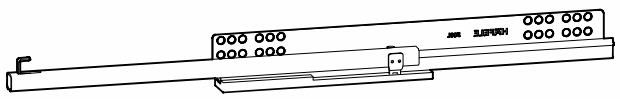 L=500		G.26 x4  L=1920
F.63 x3 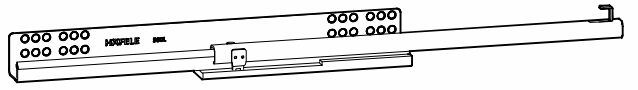 L=500		

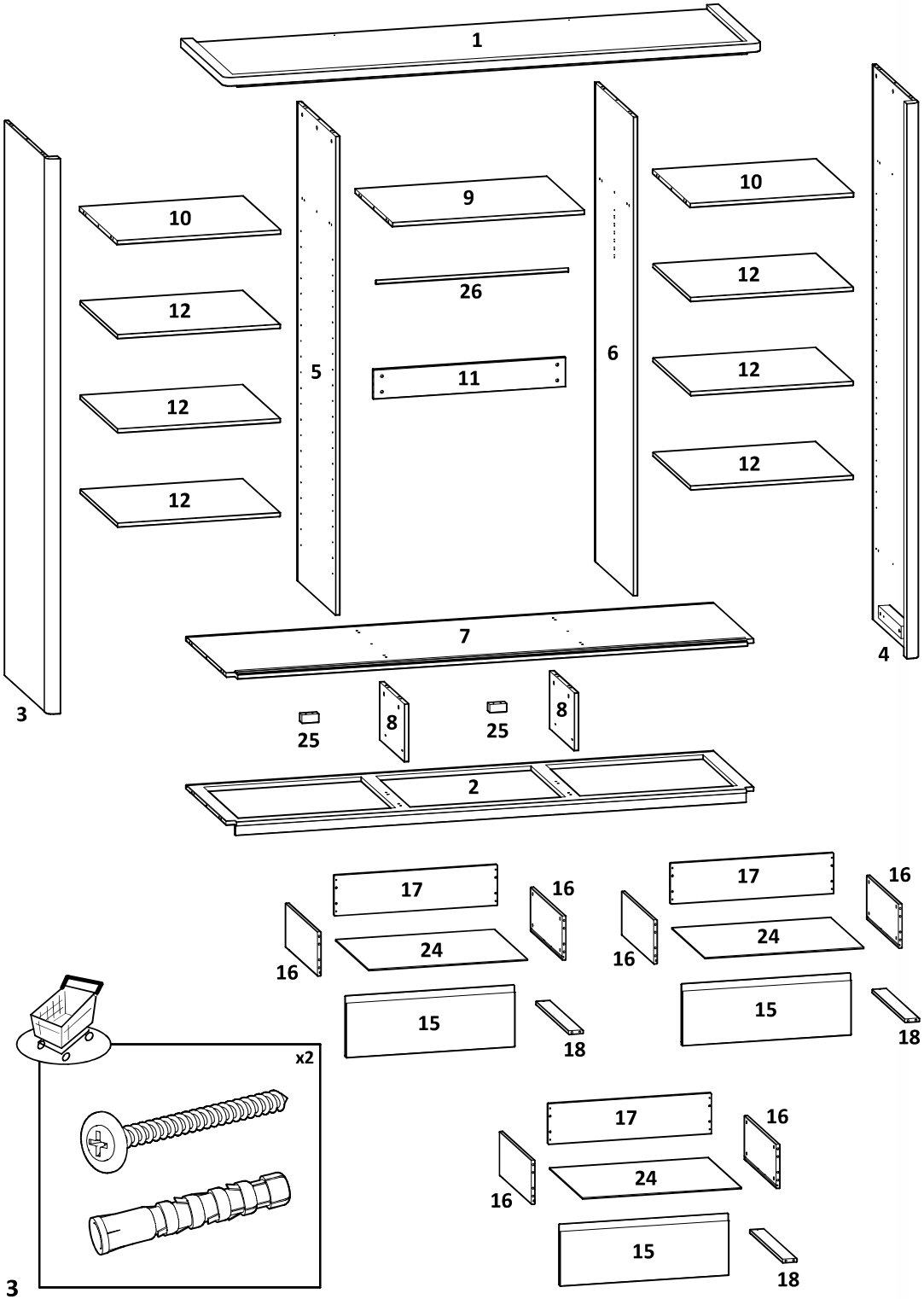

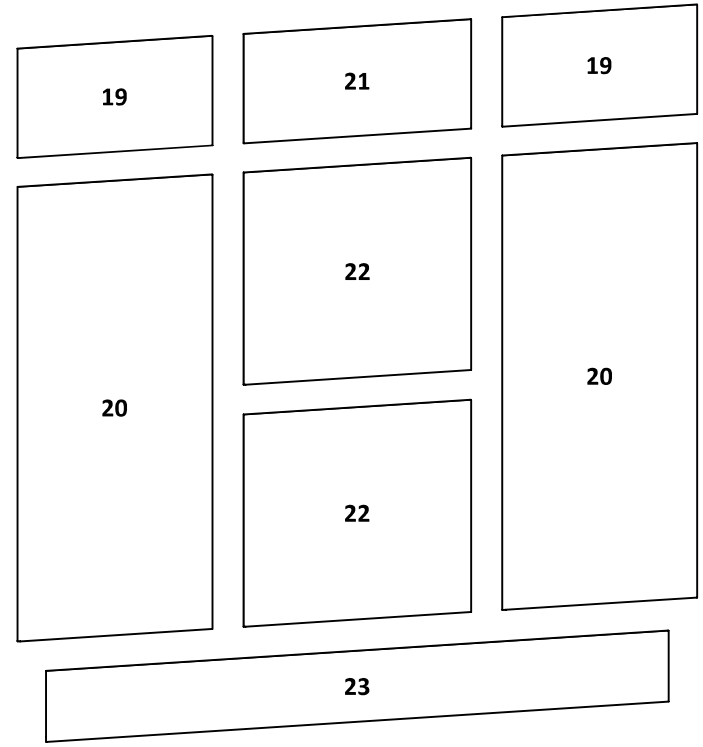

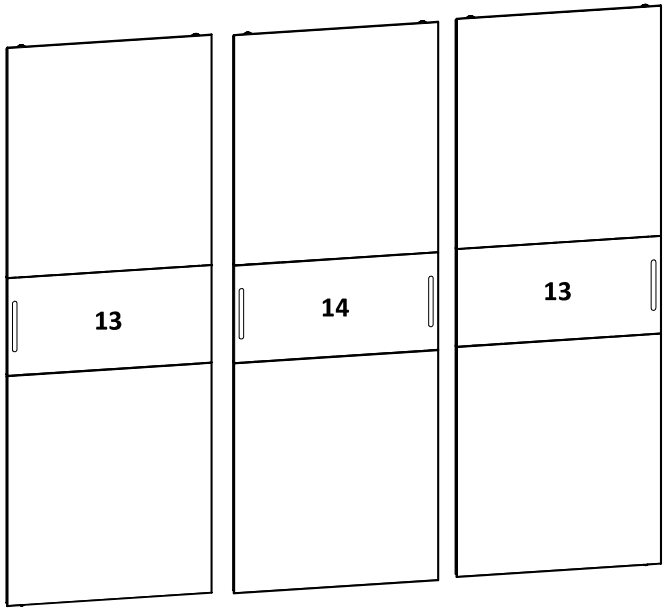

№		Sizes	Coll
1	x1	2204x661x36	
2	x1	2162x640x58	
3	x1	2264x659x65	
4	x1	2264x659x65	
5	x1	1952x593x18	
6	x1	1952x593x18	
7	x1	2162x658x18	
8	x2	376x236x18	
9	x1	786x573xx18	
10	x2	670x573x18	
11	x1	786x120x15	
12	x6	668x573x18	
13	x2	1940x714x20	
14	x1	1940x714x20	
15	x3	692x250x18	
16	x6	485x180x15	
17	x3	668x165x15	
18	x3	500x60x15	
19	x2	380x680	
20	x2	1580x680	
21	x1	794x380	
22	x2	794x738	
23	x1	2176x246	
24	x3	649x505	
25	x2	80x40x40	
26	x1	776x22x16	



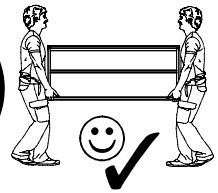

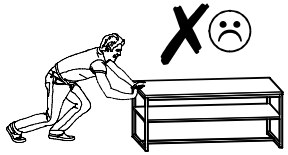

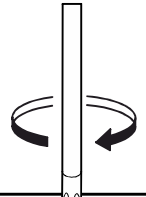

1
x3

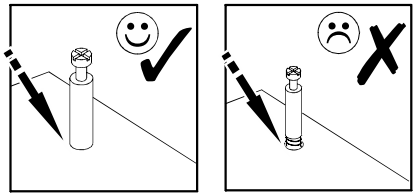

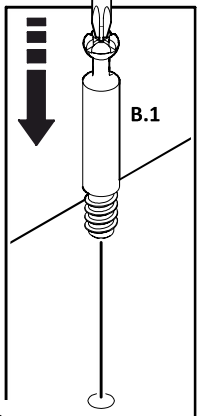

9x

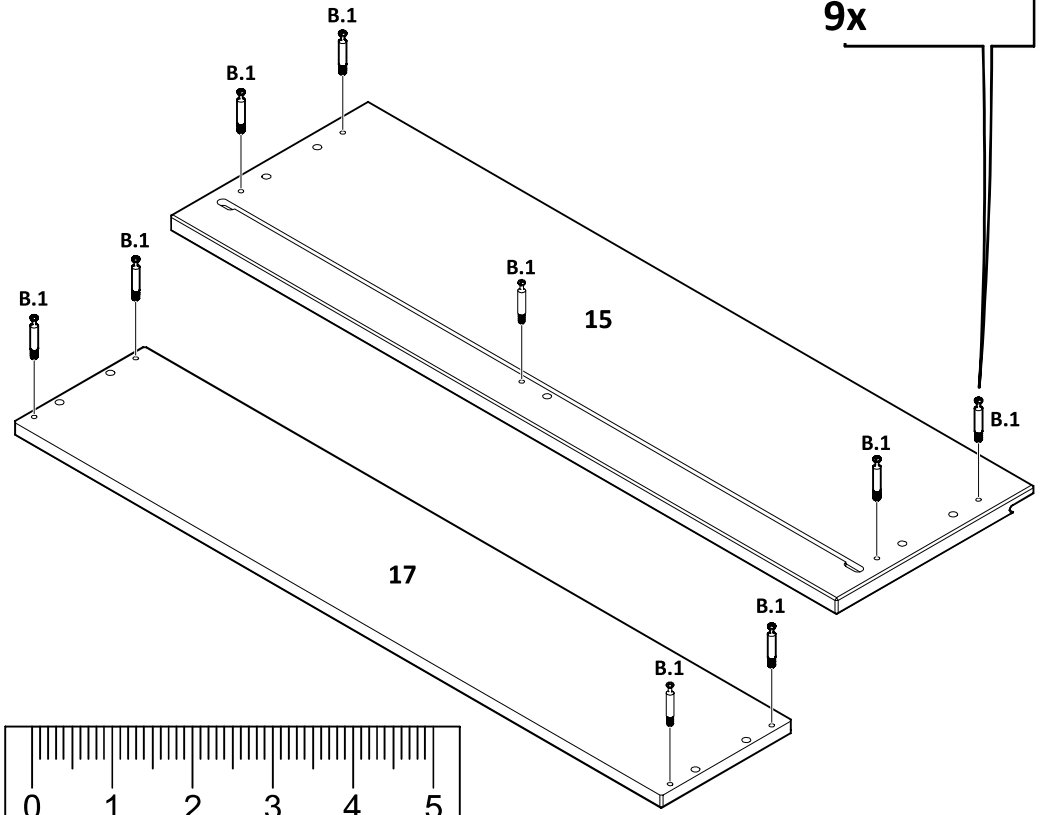

5

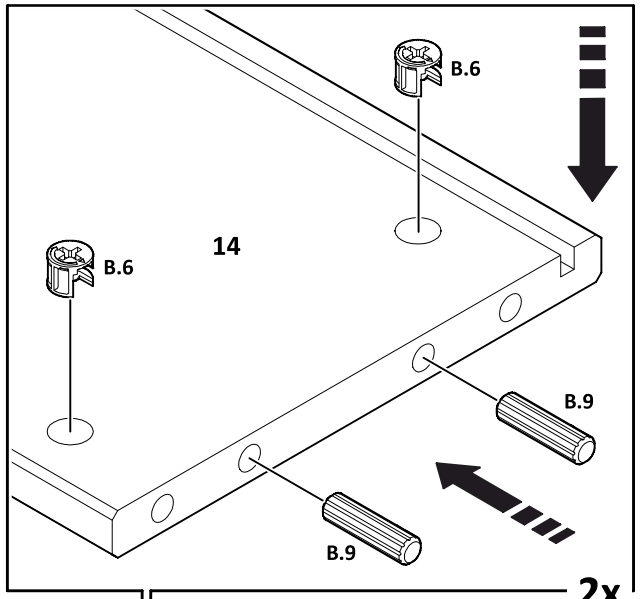

2x

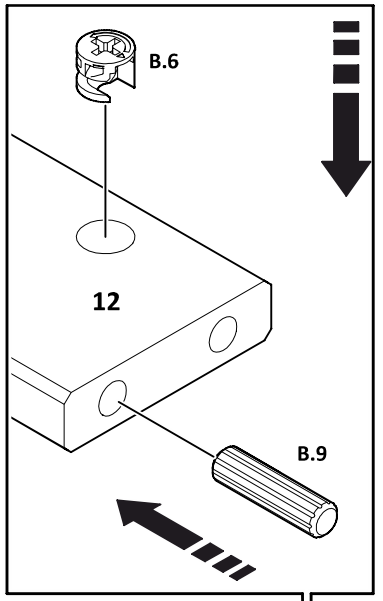

2

x2

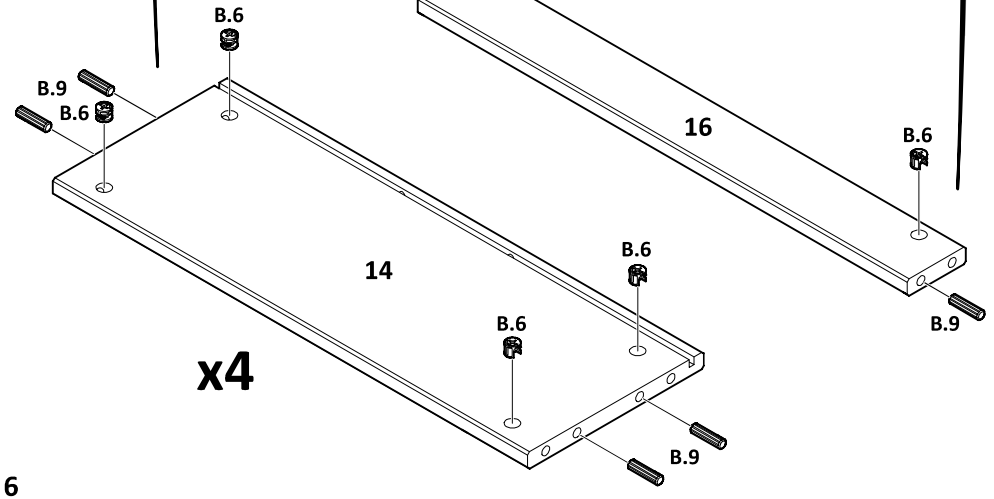

x4

6

3
x3

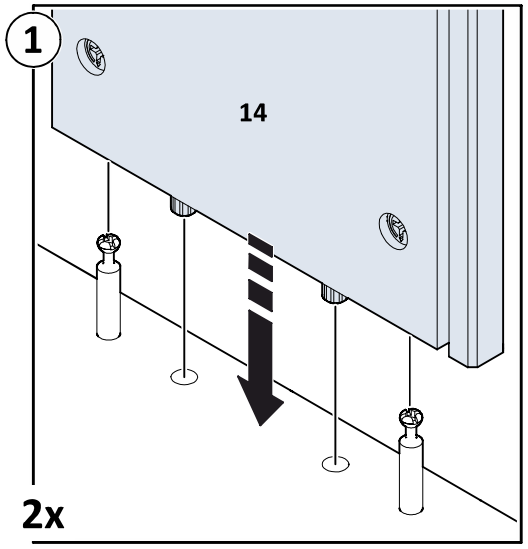

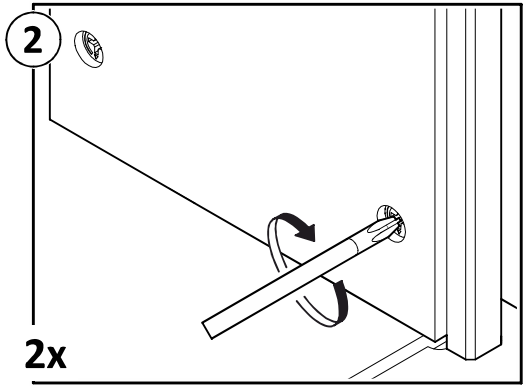

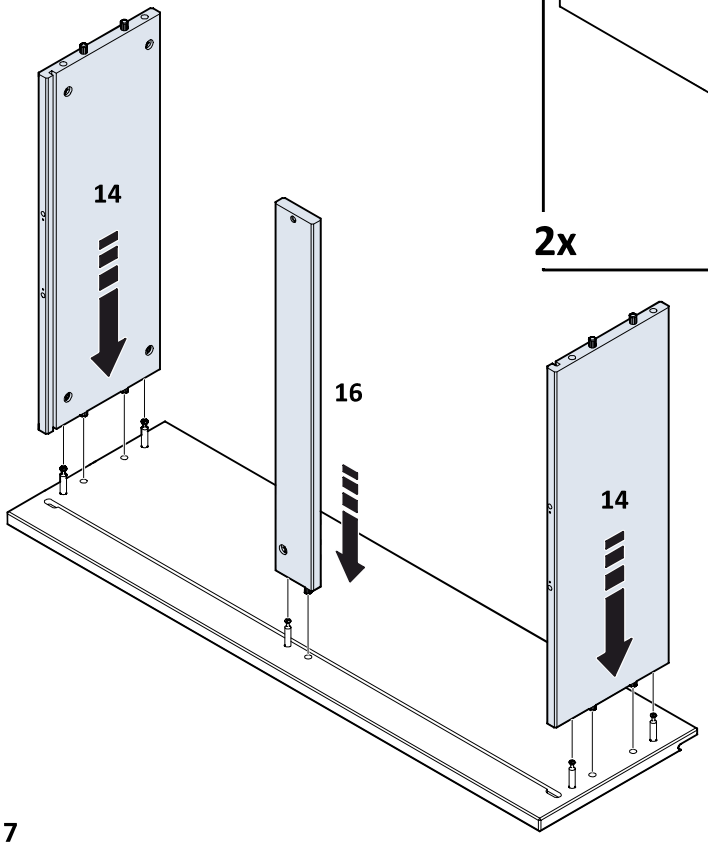

4
x3

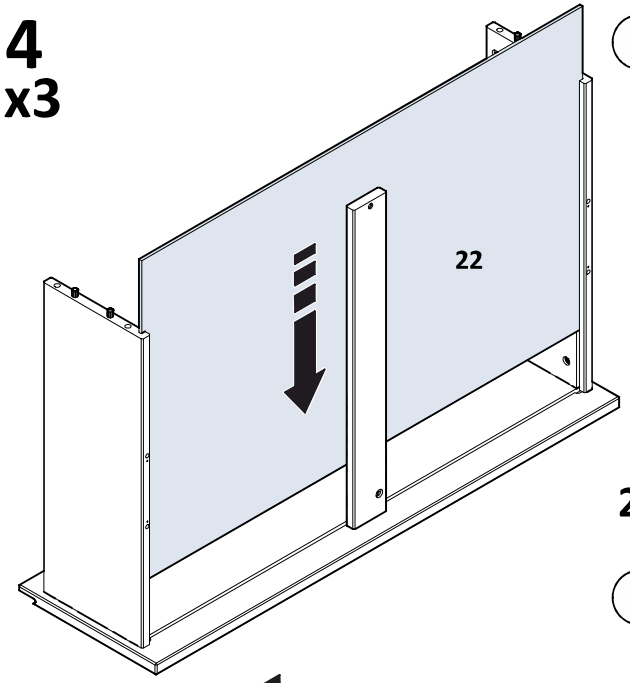

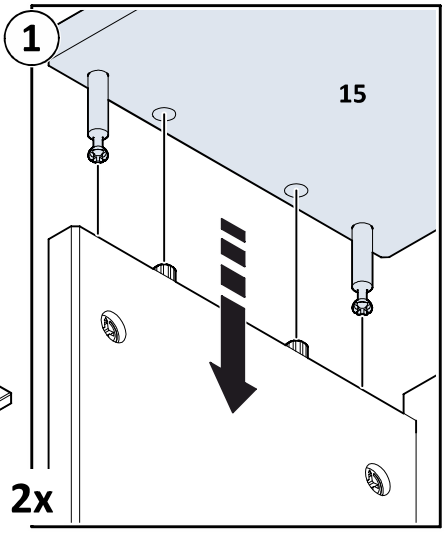

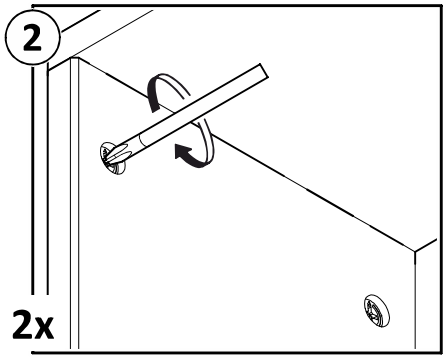

5
x3

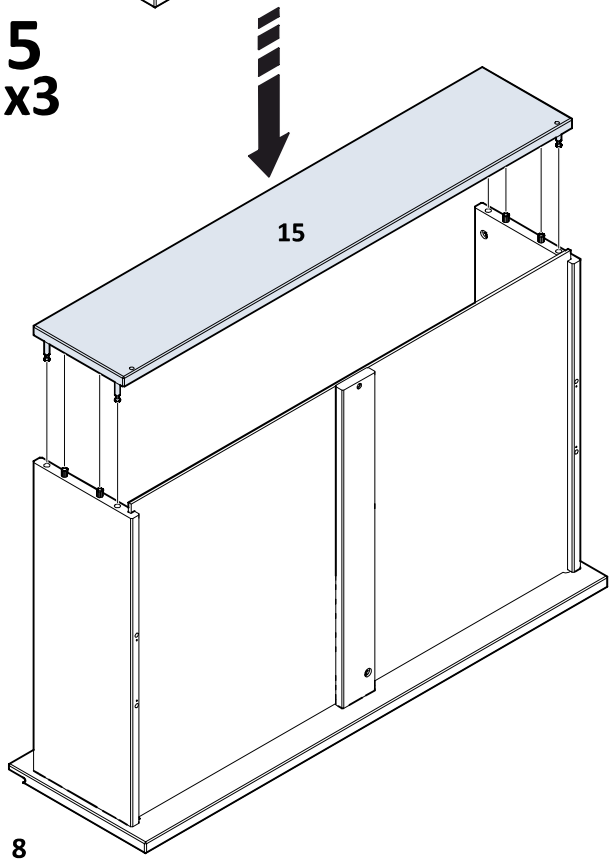

6
x3

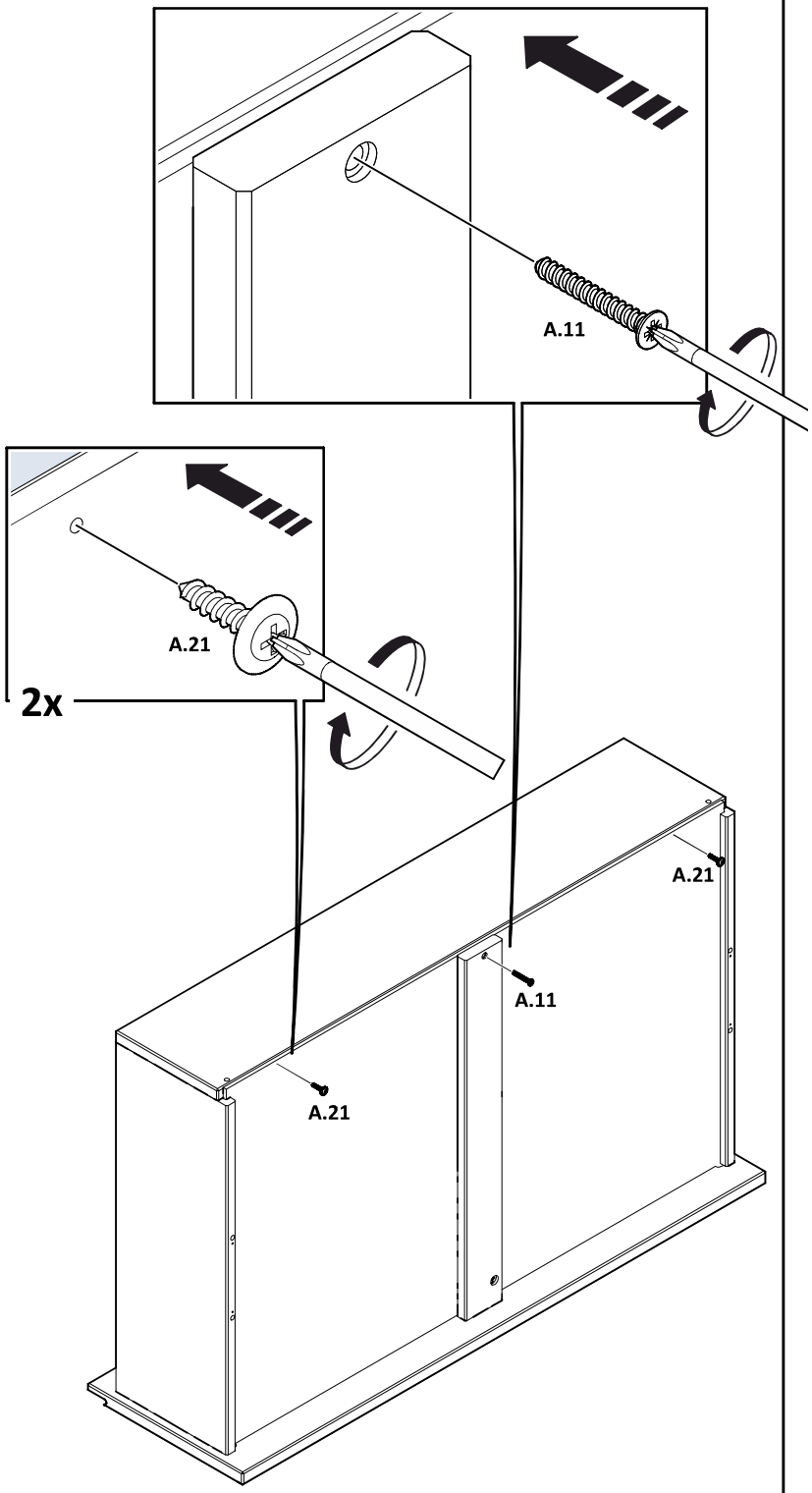
A.11
A.21
2x
A.21
A.11
A.21

7

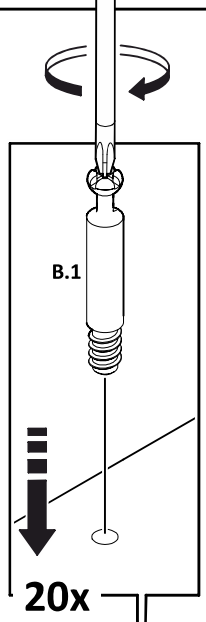
B.1
20x

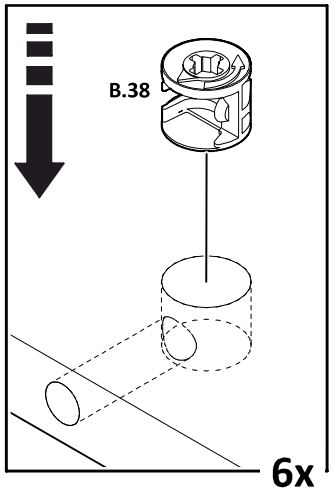
B.38
6x

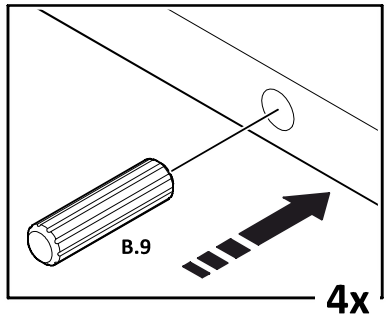
B.9
4x

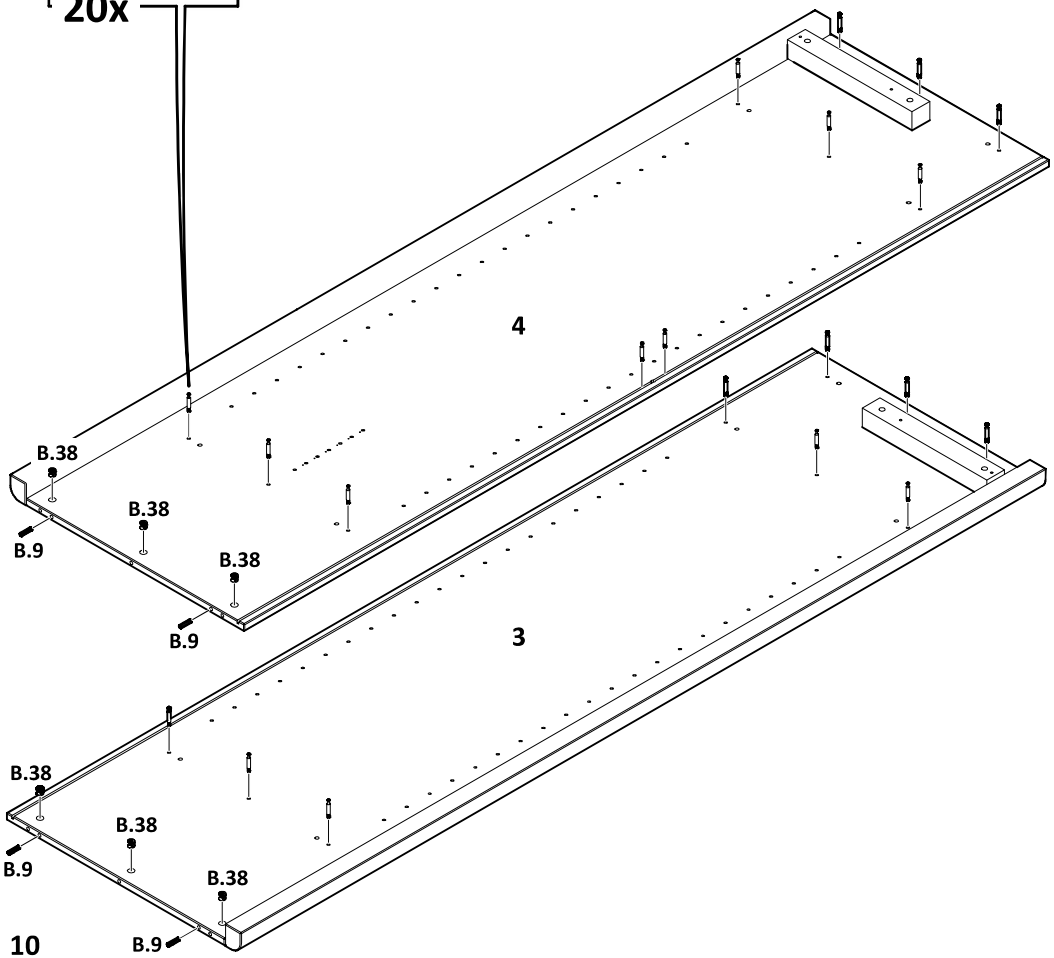
4
B.38
B.38
B.9
B.38
B.9
3
B.38
B.38
B.9
B.38
B.9

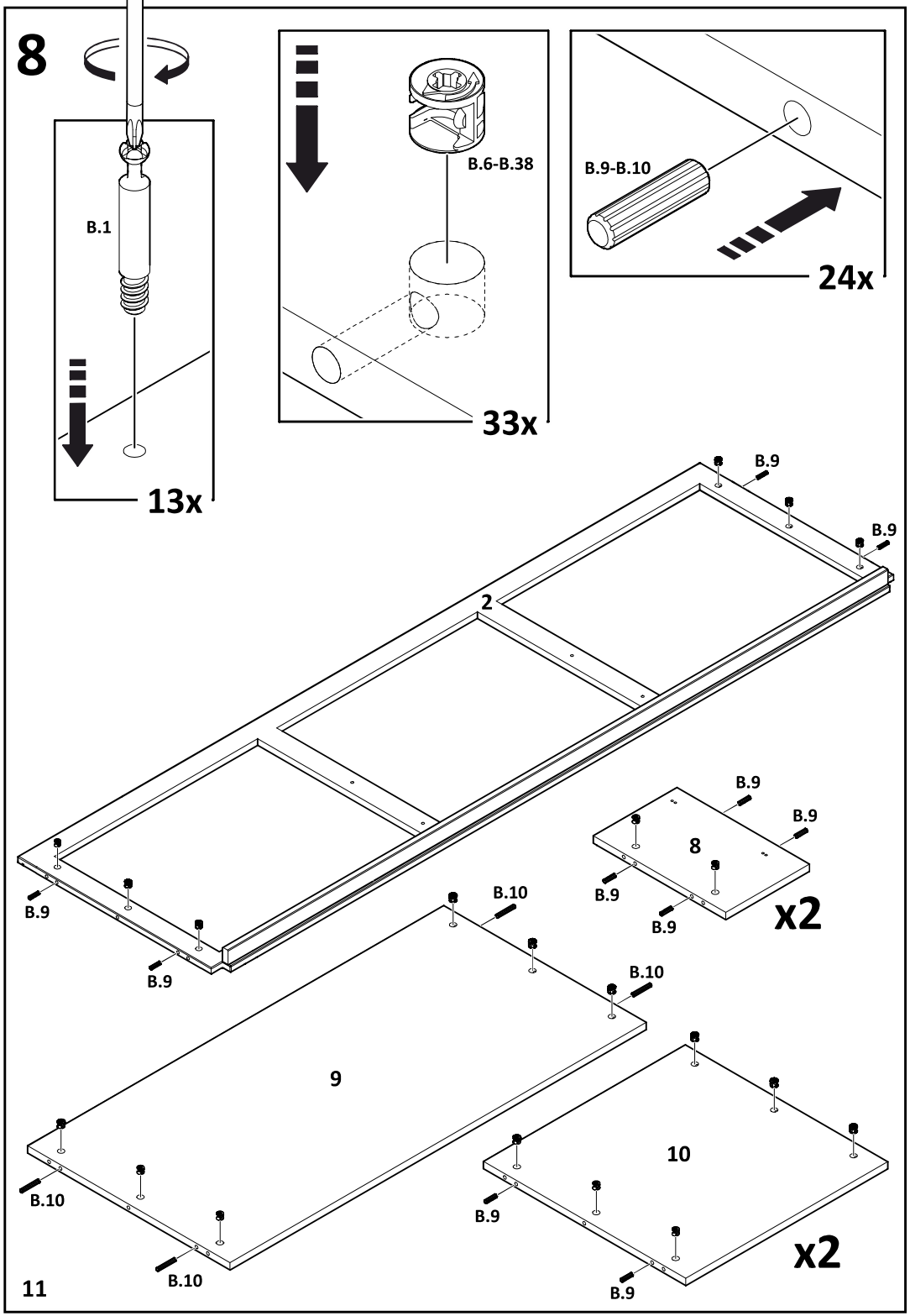
8
B.1
13x
B.6-B.38
33x
B.9-B.10
24x
B.9
2
B.10
8
x2
9
10
x2
11

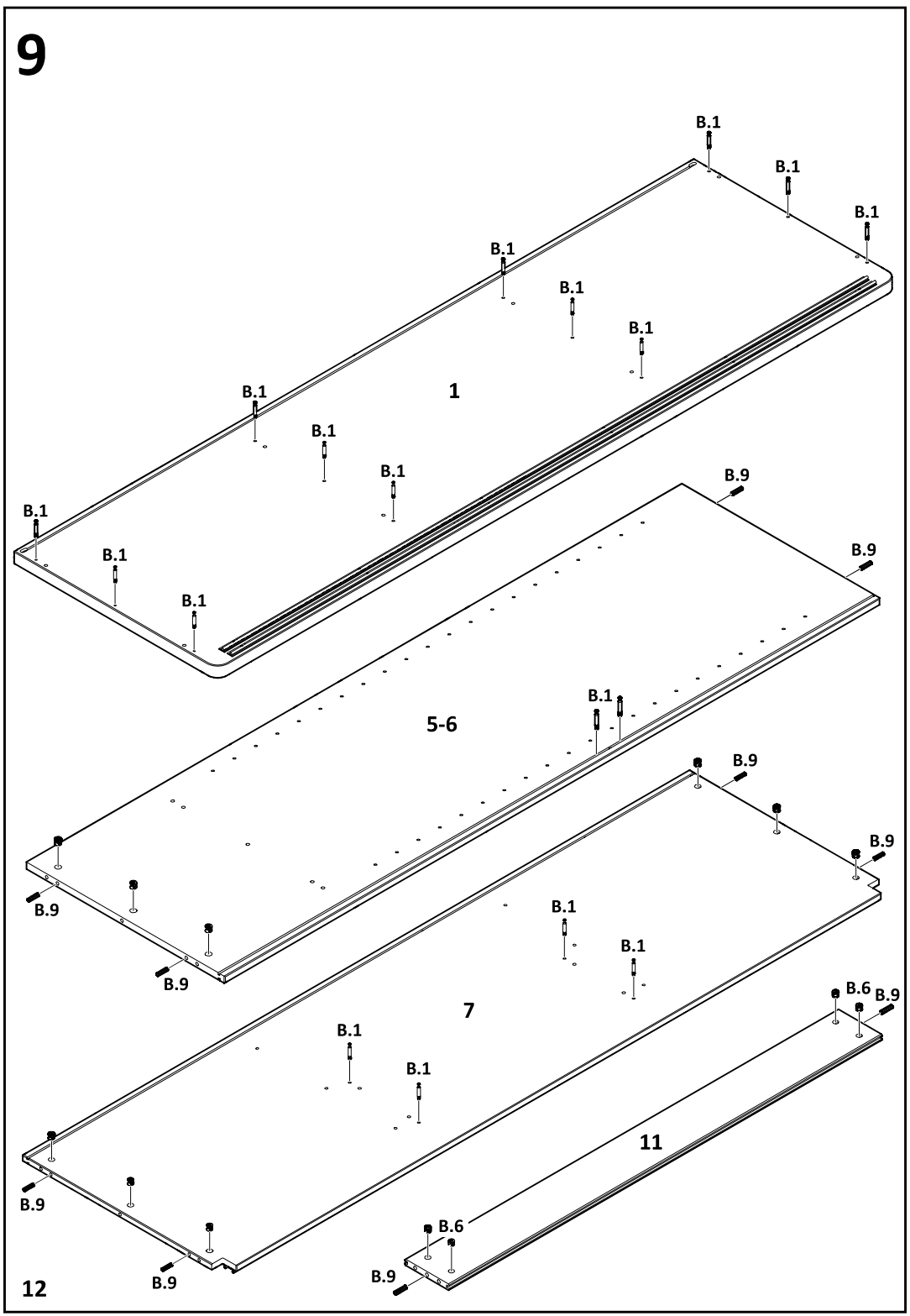
9
B.1
1
5-6
B.9
7
B.6
11
12

10

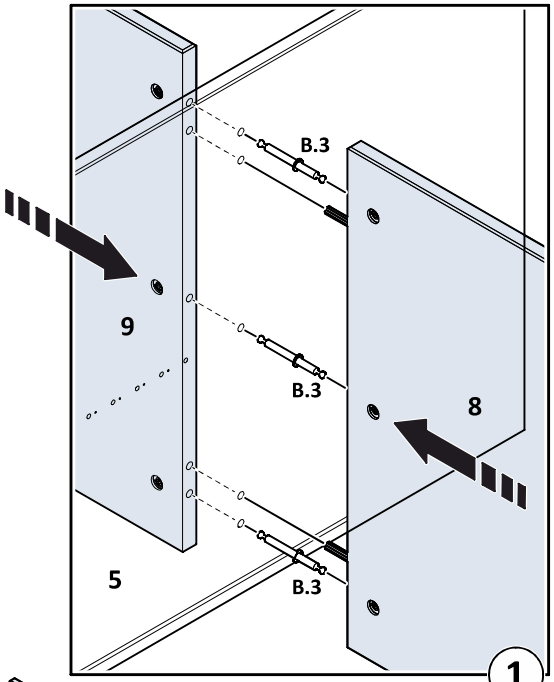
B.3
9
B.3
8
5
B.3
1

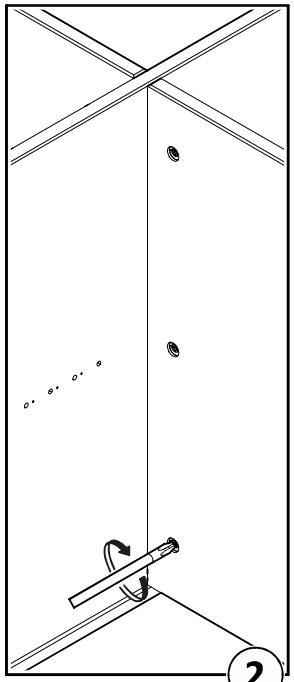
2

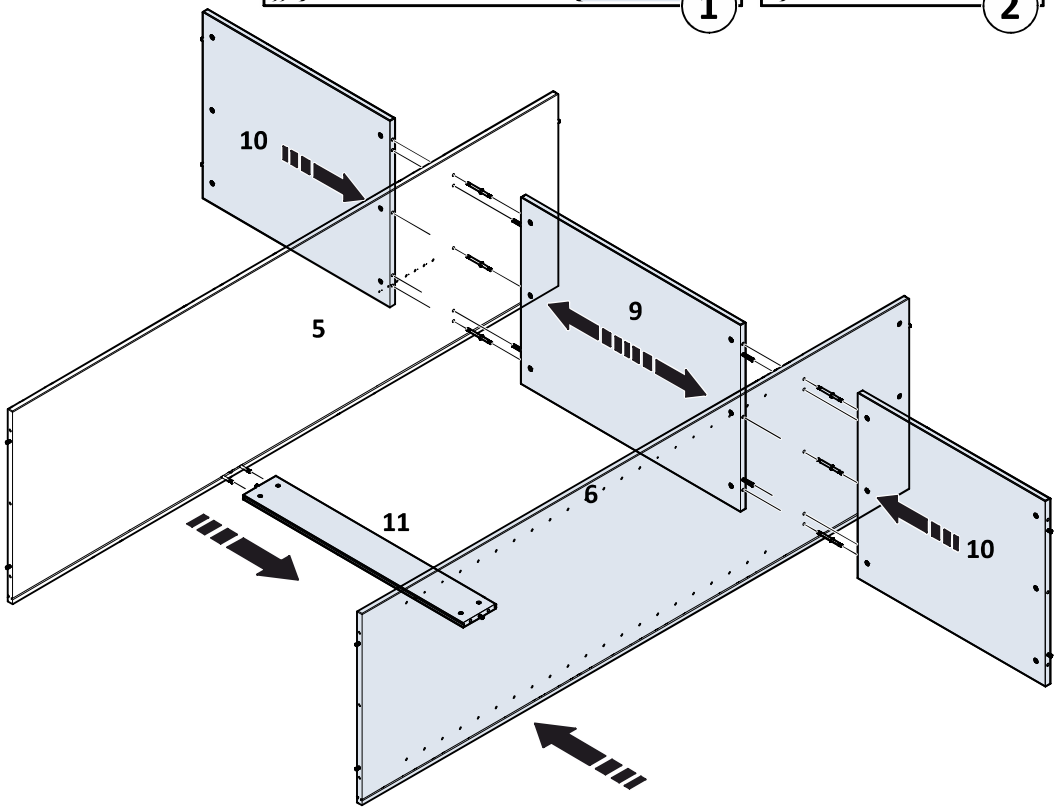
10
5
9
11
6
10

11

2x

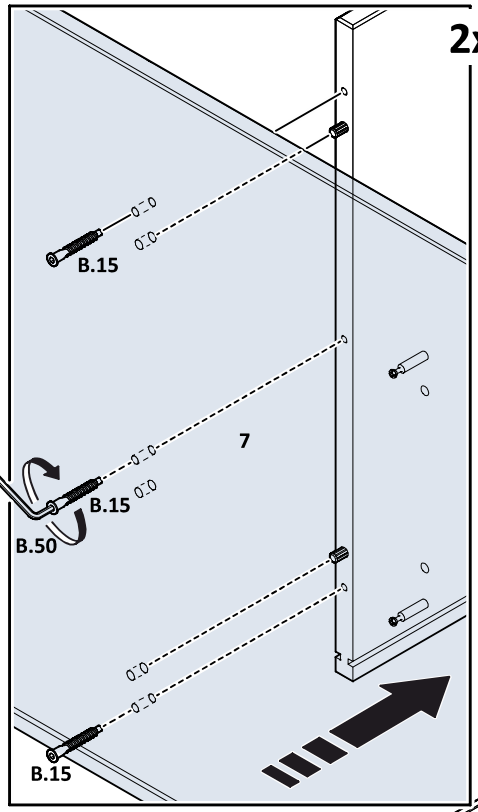
B.15
7
B.15
B.50
B.15

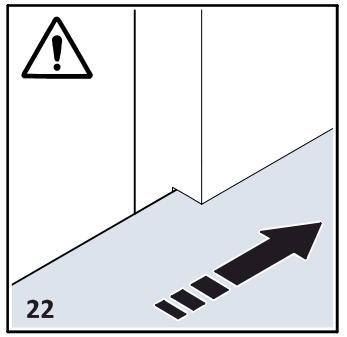
22

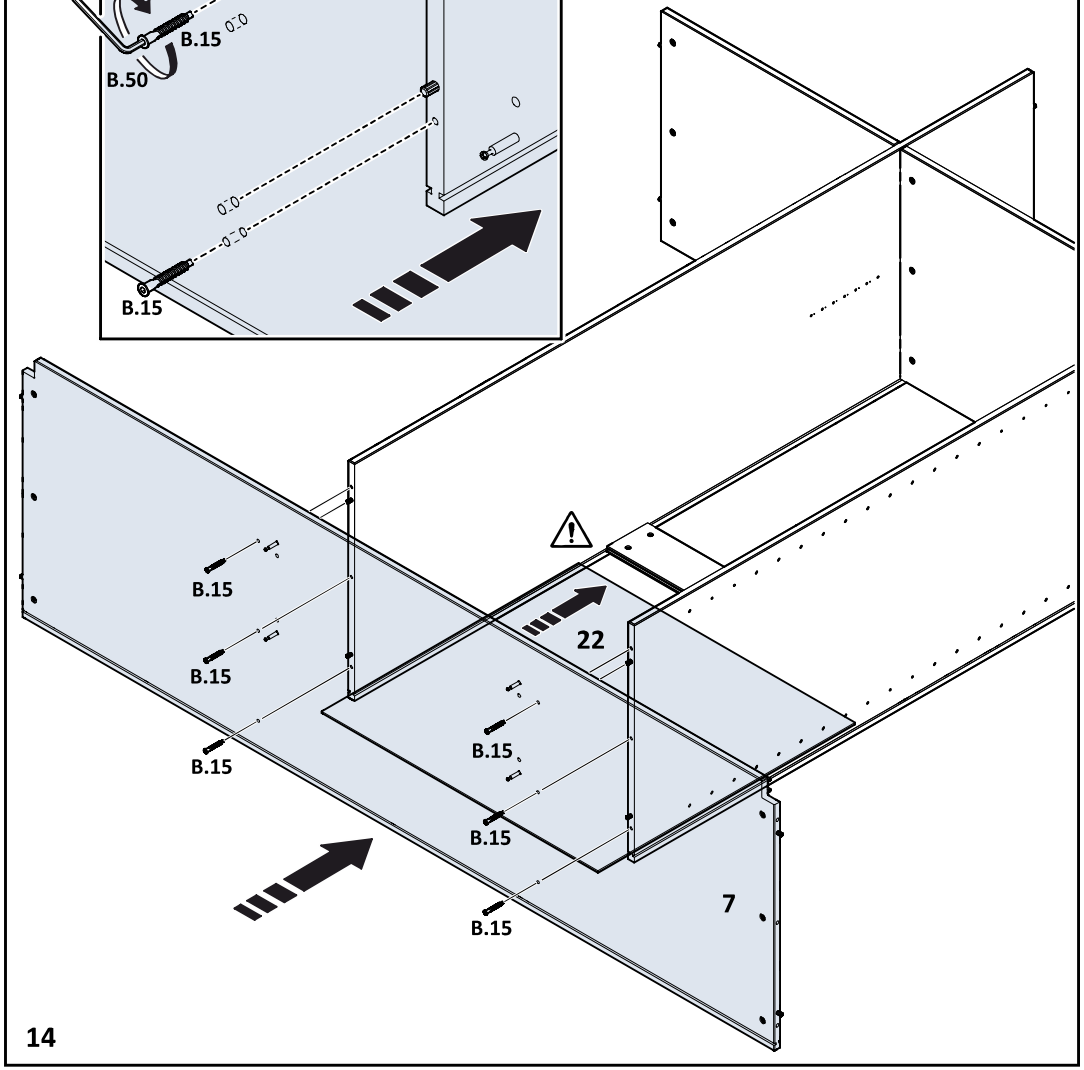
B.15
B.15
B.15
B.15
B.15
22
7

12

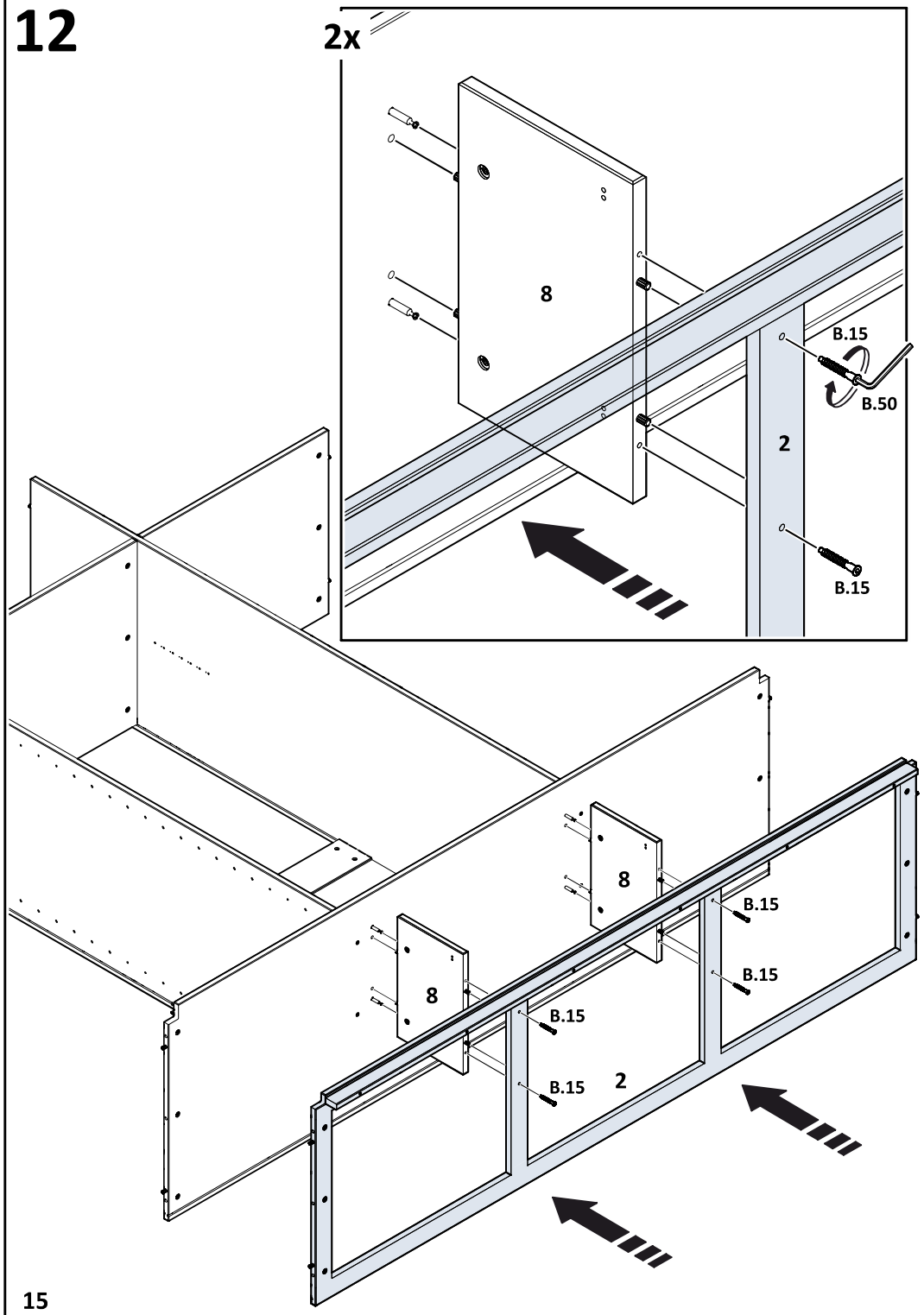

13

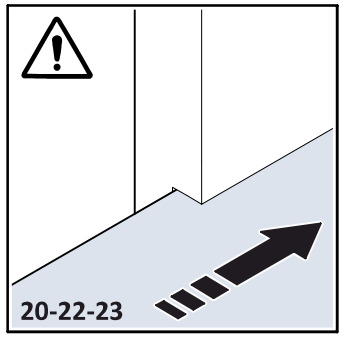

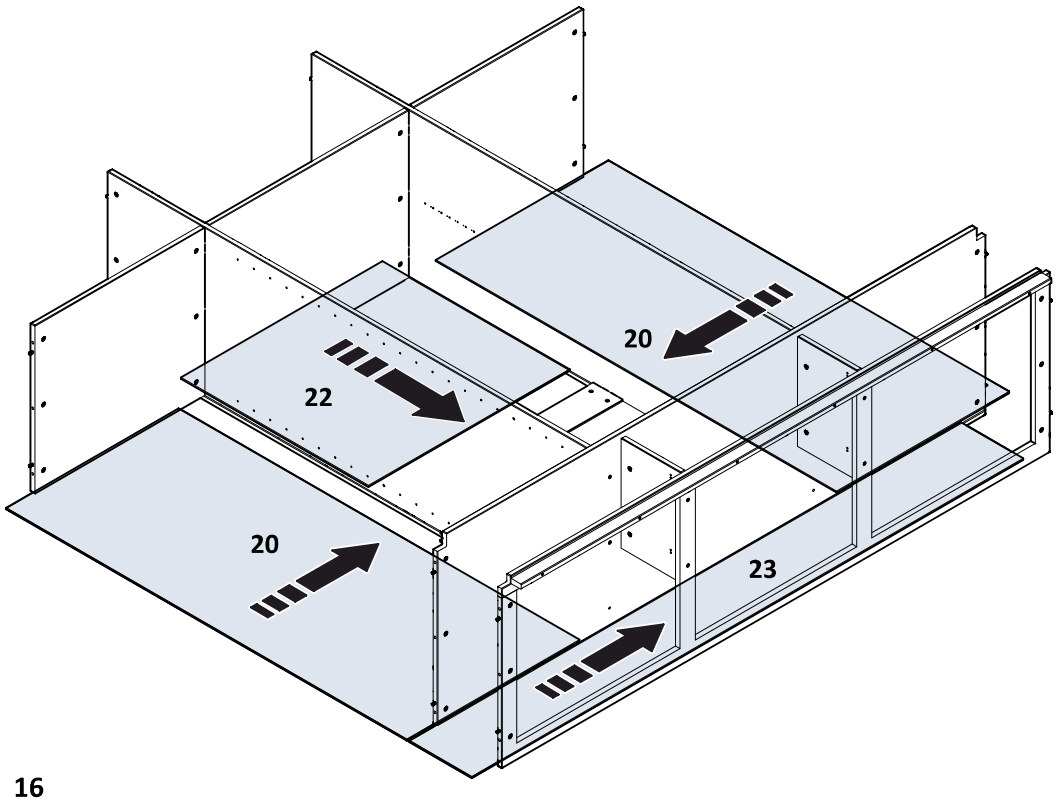

14

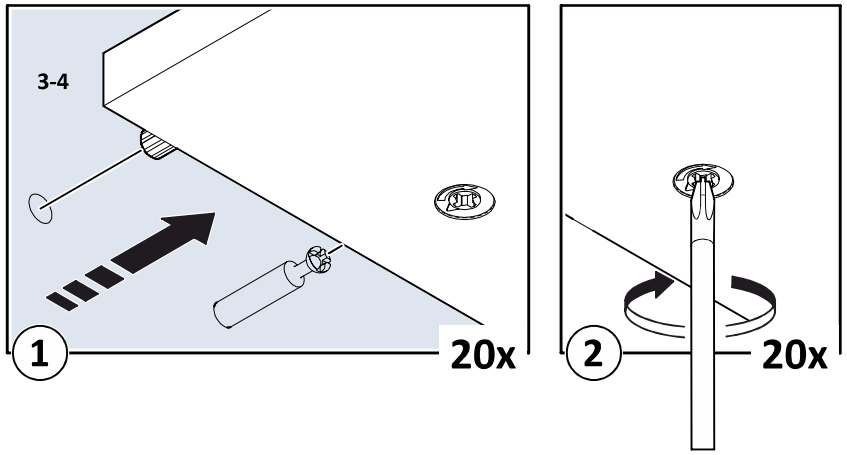
3-4
1
20x
2
20x

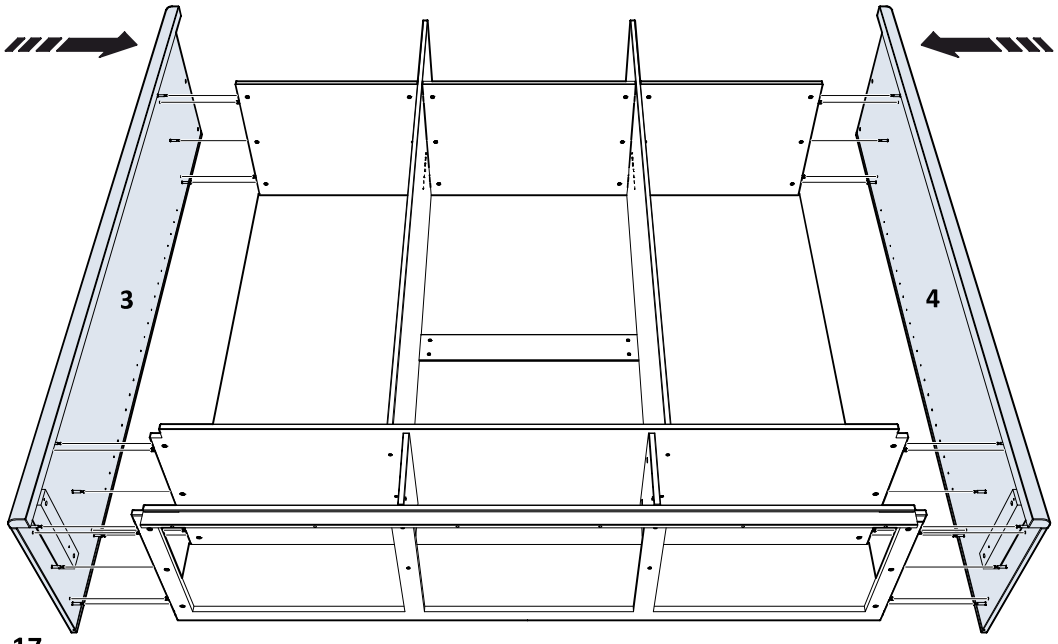
3
4

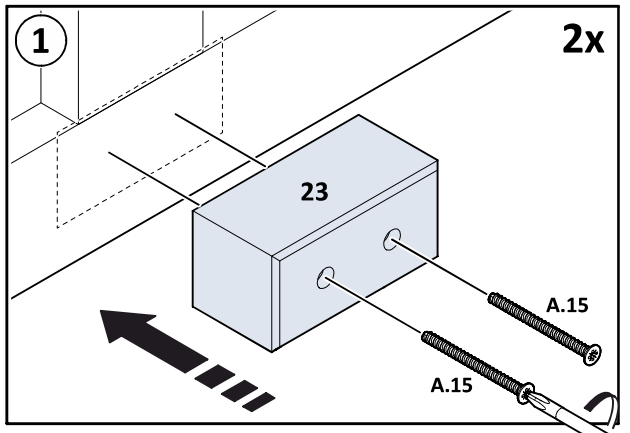
1
2x
23
A.15
A.15

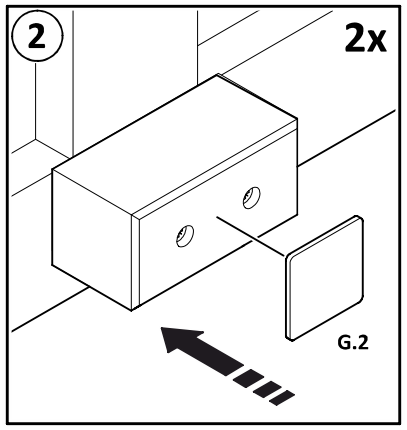
2
2x
G.2

15

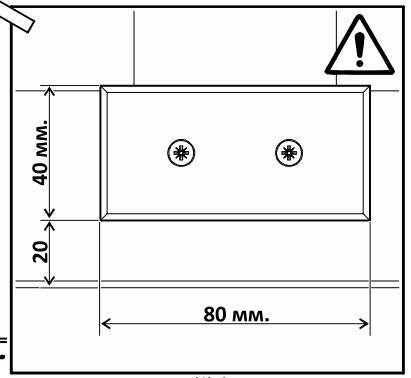
40 мм.
20
80 мм.

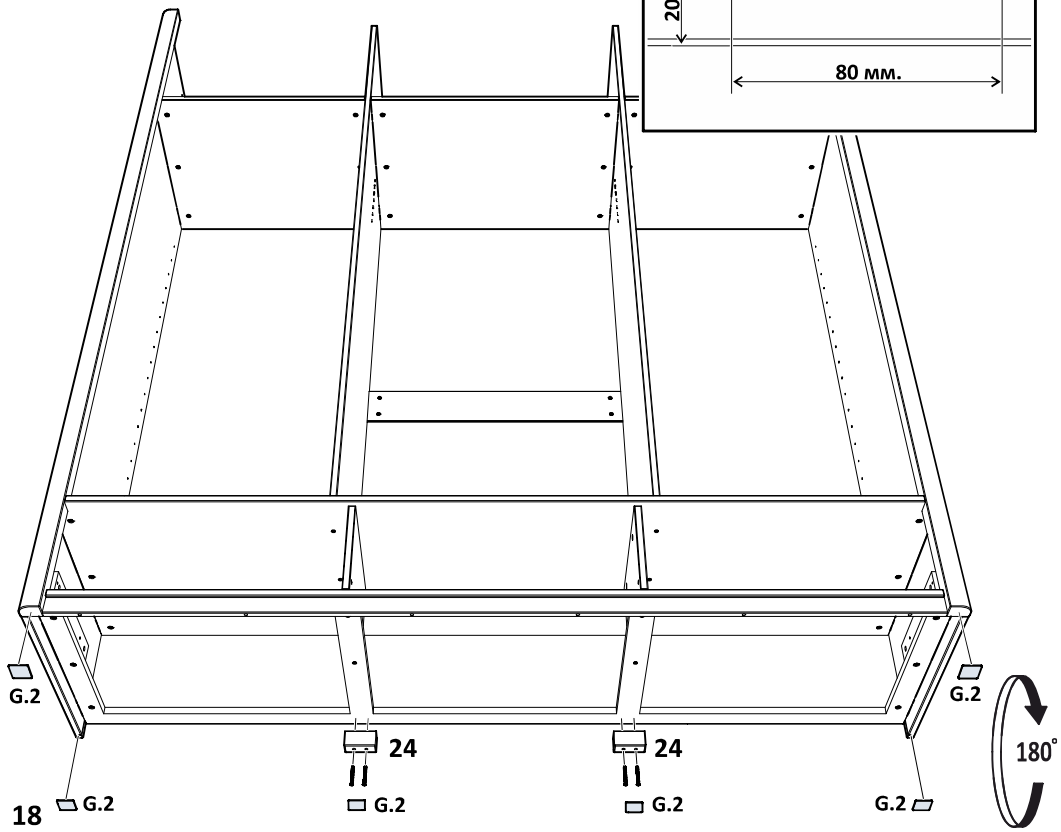
G.2
G.2
24
24
G.2
G.2
G.2
G.2
180°

16

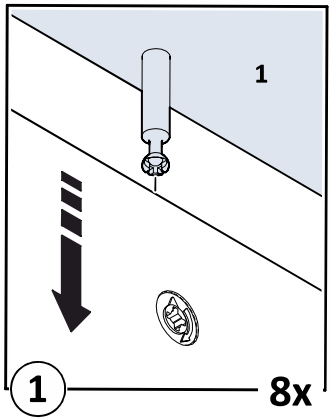
1
1
8x

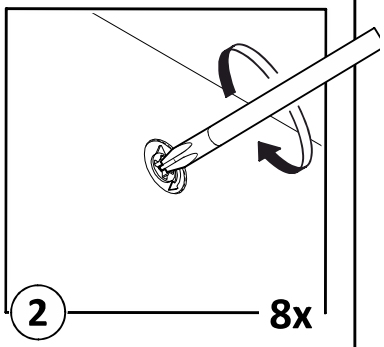
2
8x

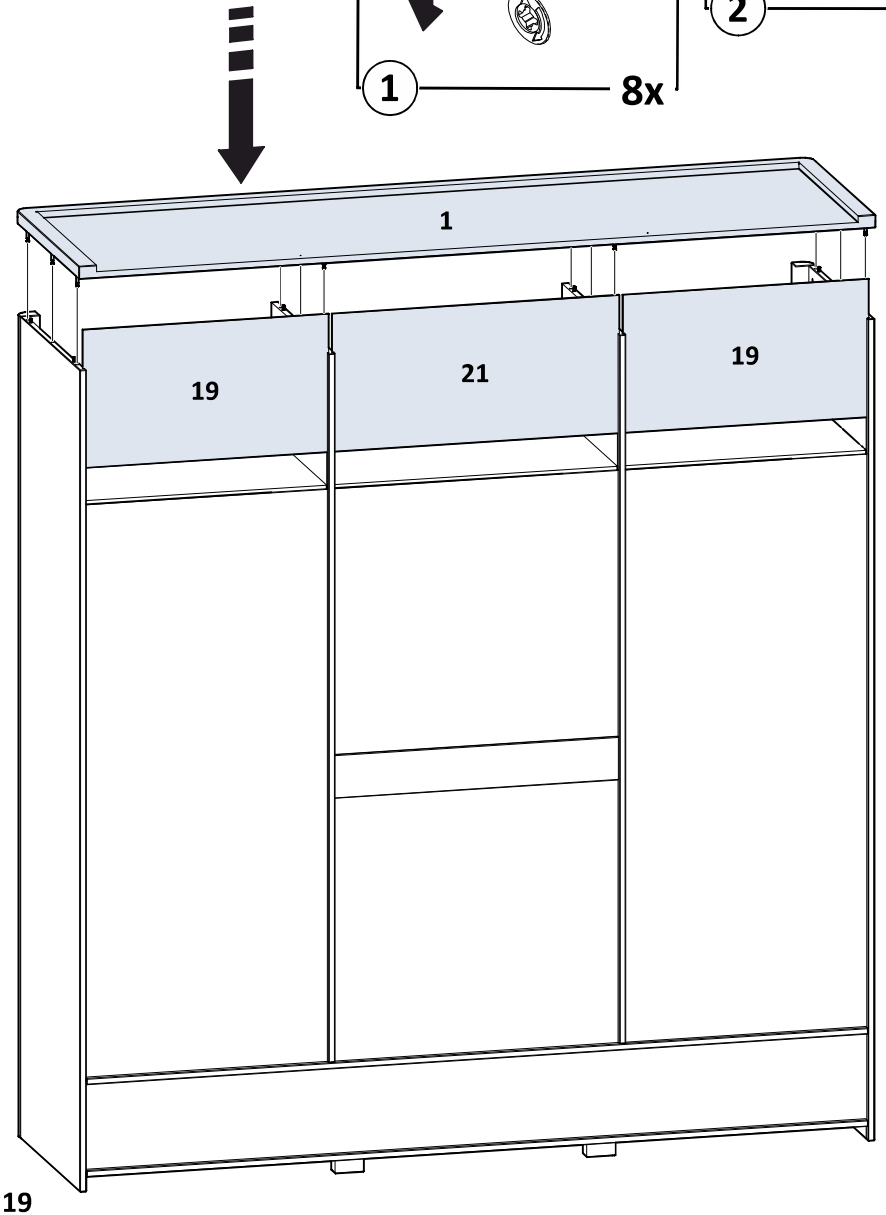
1
19
21
19

17

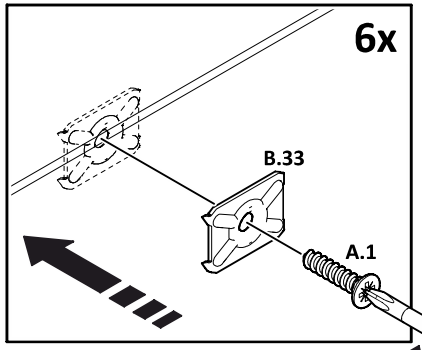
6x
B.33
A.1

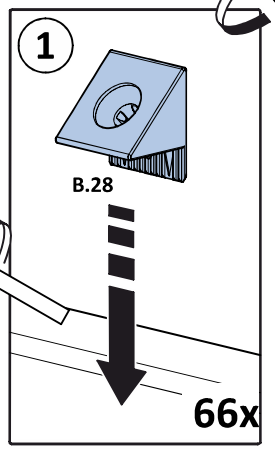
1
B.28
66x

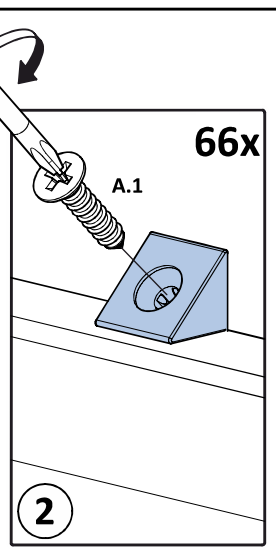
66x
A.1
2

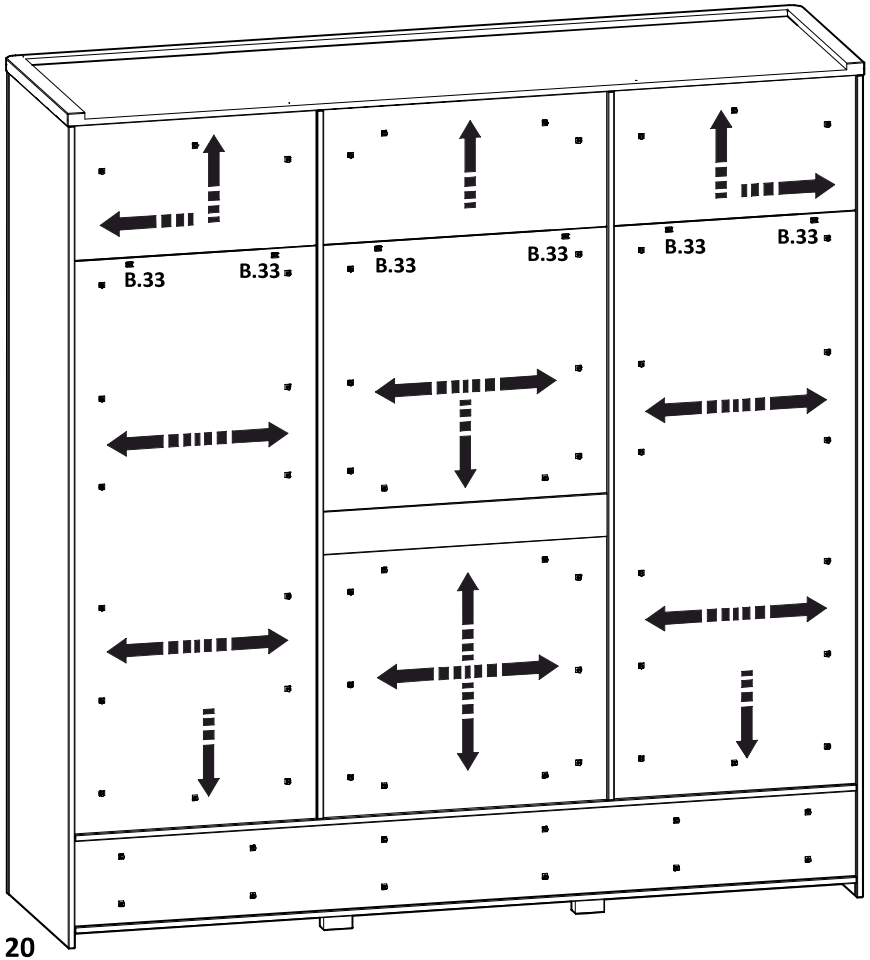
B.33
B.33
B.33
B.33
B.33
B.33

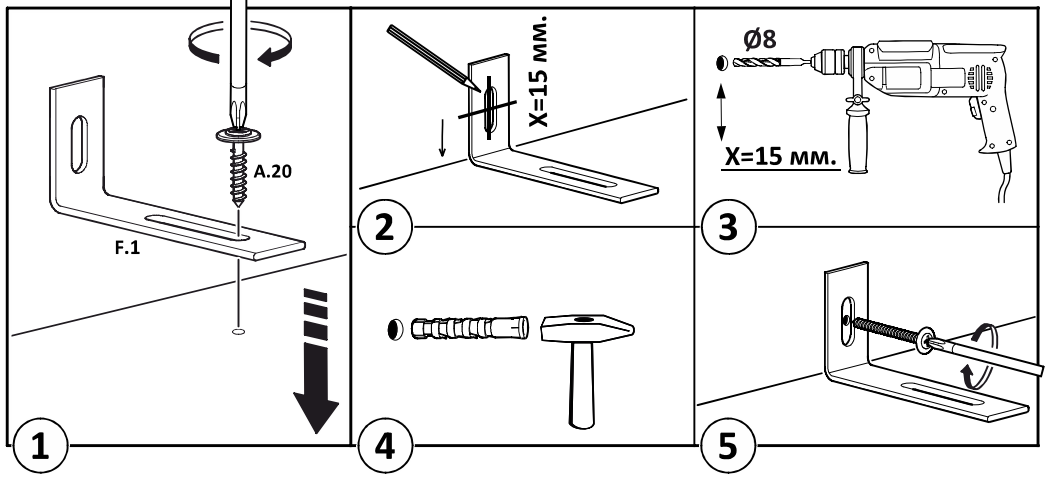
A.20
F.1
X=15 мм.
Ø8
X=15 мм.
1
2
3
4
5

18

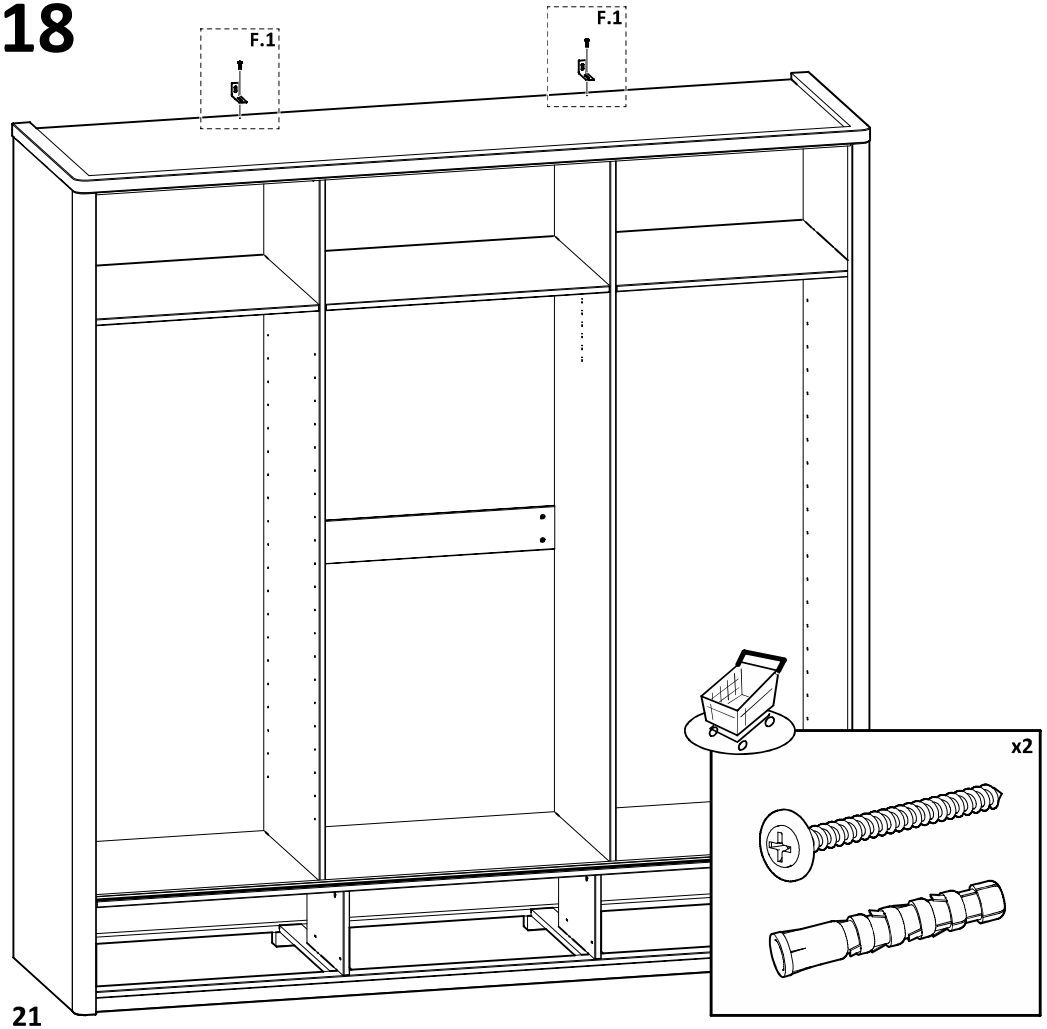
F.1
F.1
x2

21

19

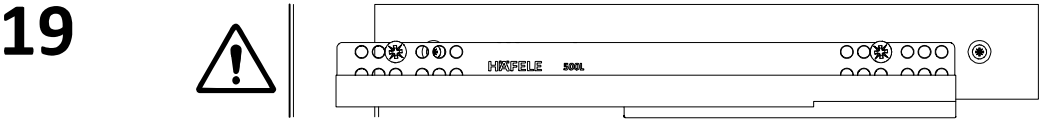
HAFELE

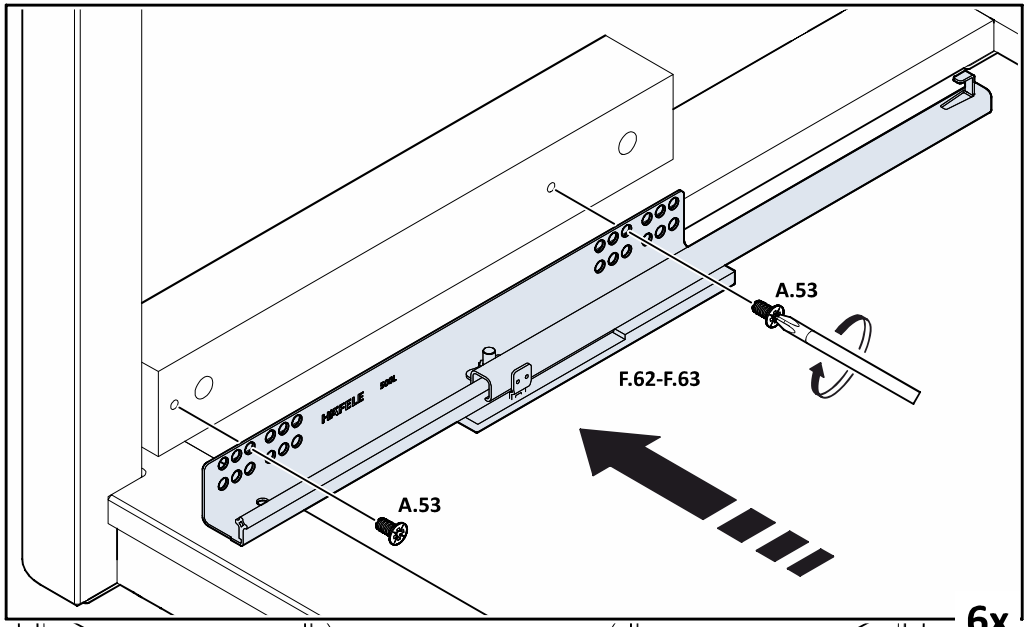
A.53
F.62-F.63
A.53
6x

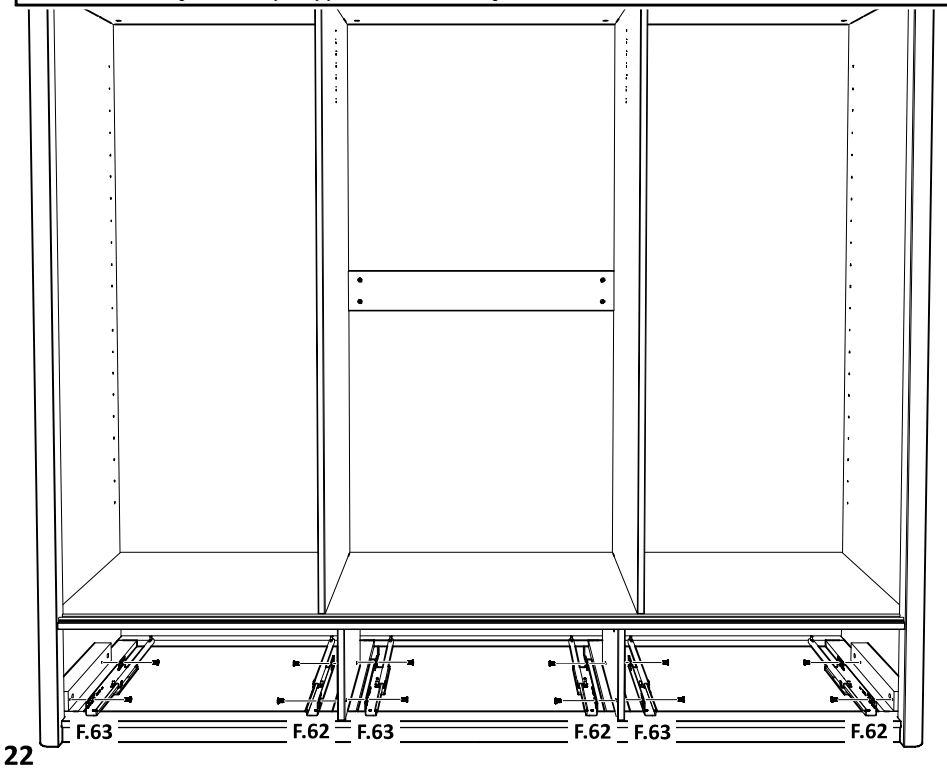
F.63
F.62
F.63
F.62
F.63
F.62

22

20

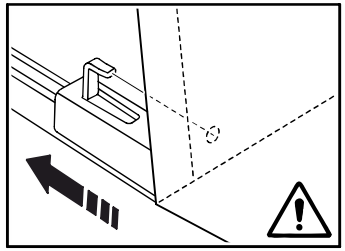

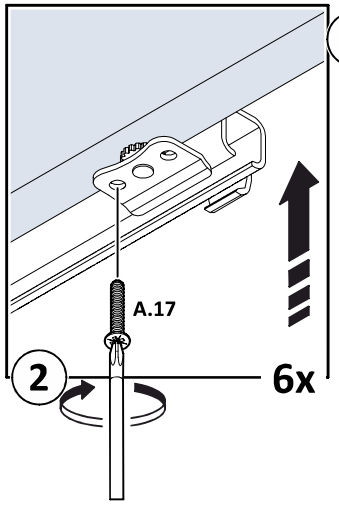

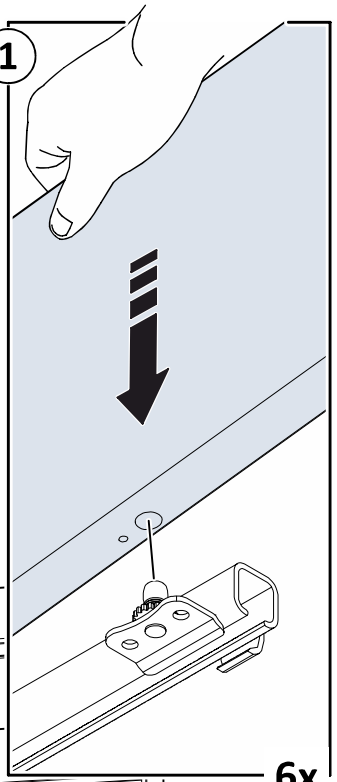

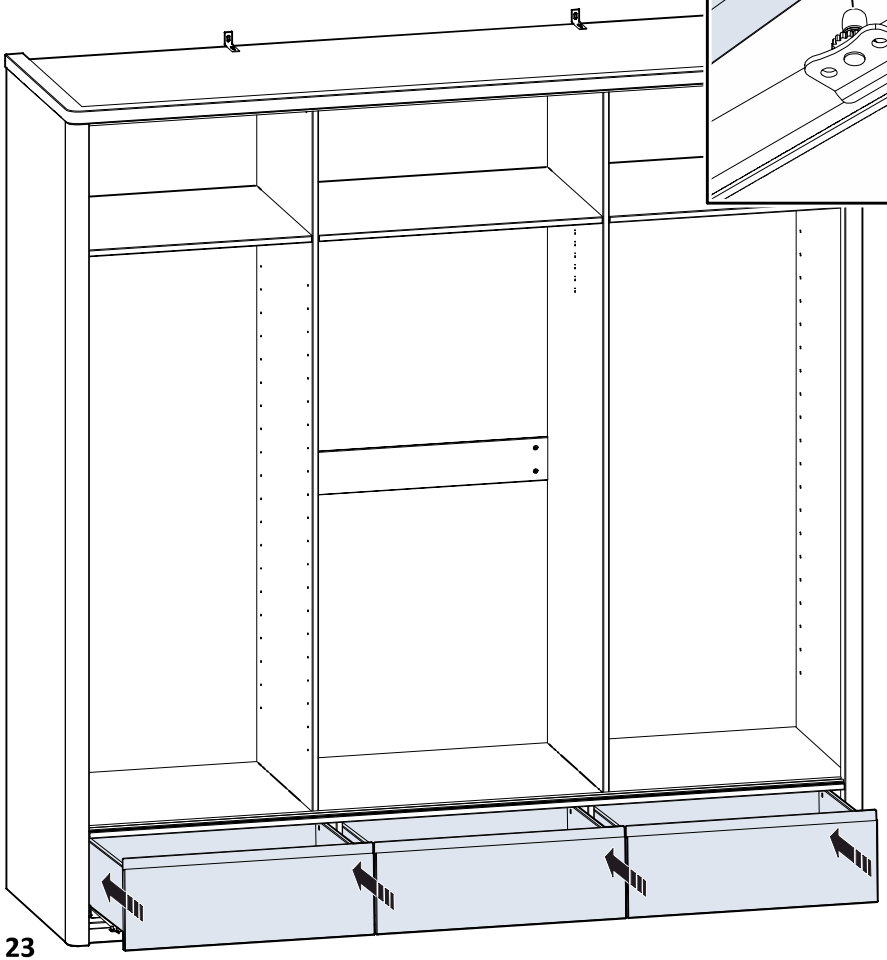

23

21

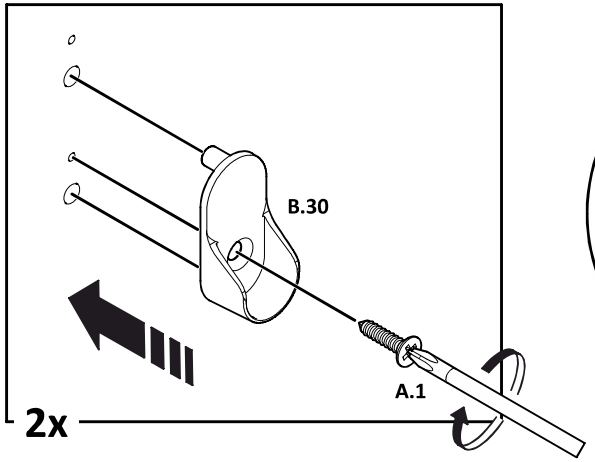

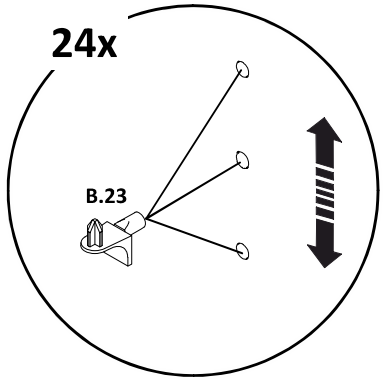

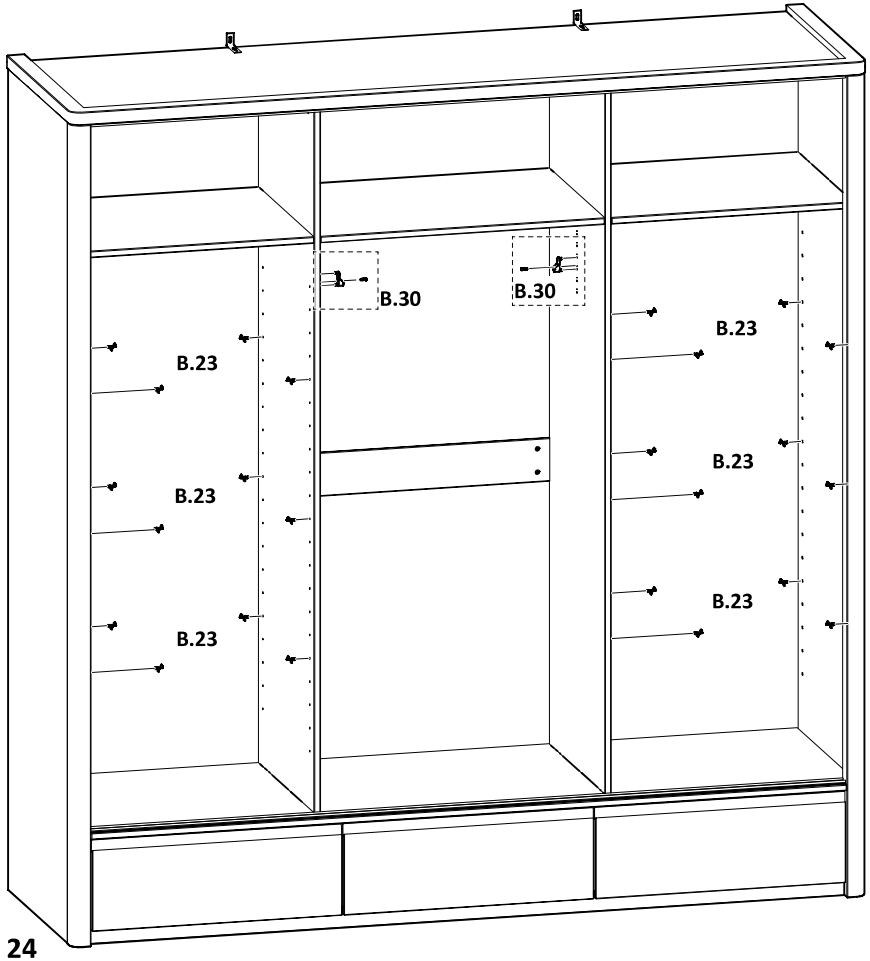

24

22

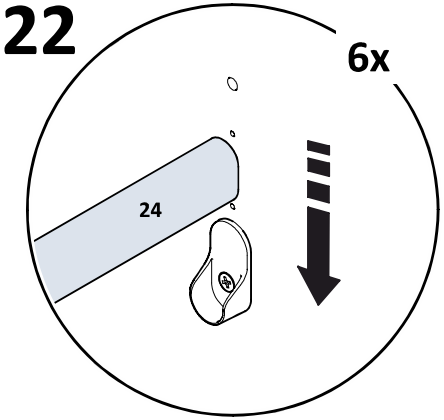
6x
24

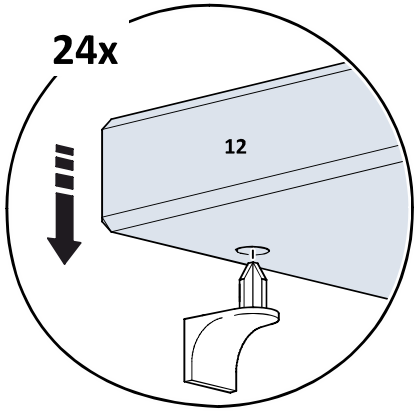
24x
12

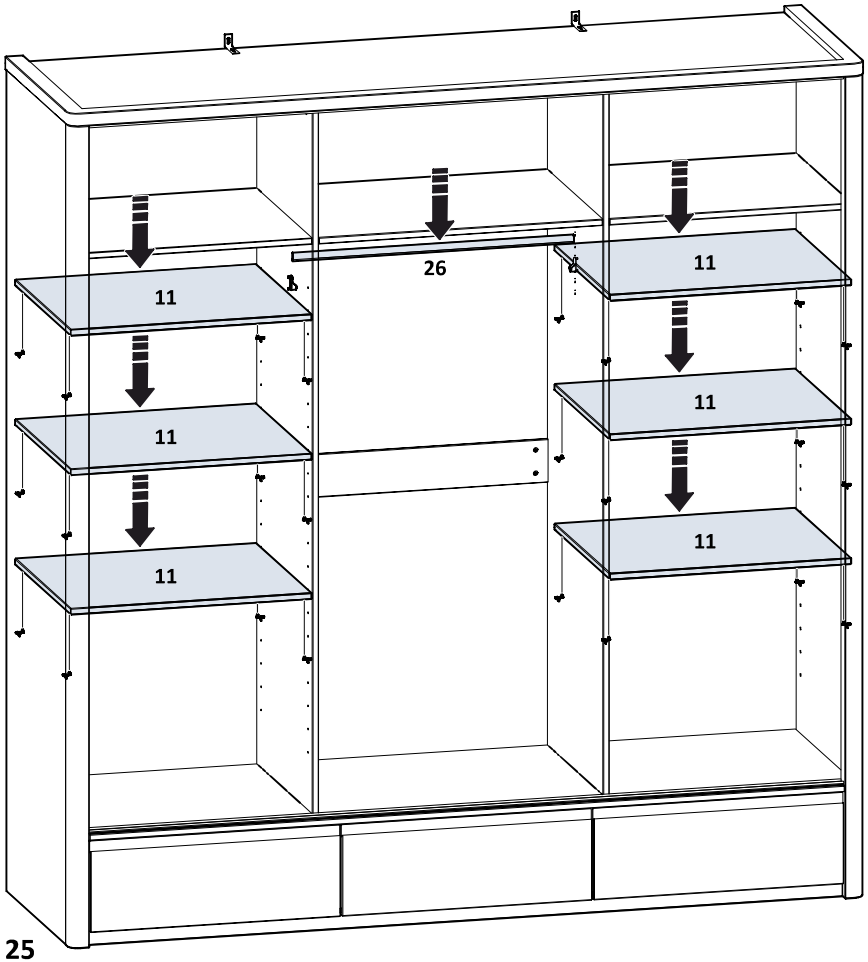
11
11
11
26
11
11
11

25

23

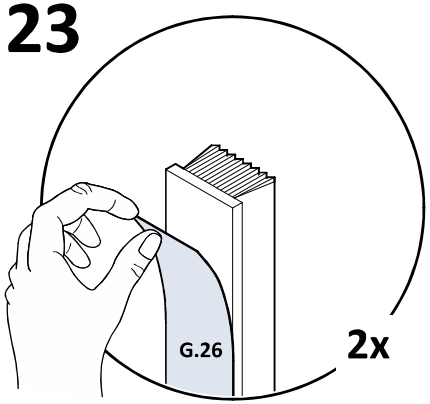
G.26
2x

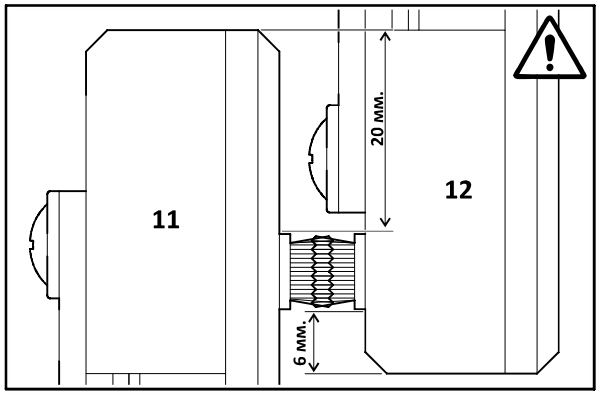
11
12
20 мм.
6 мм.

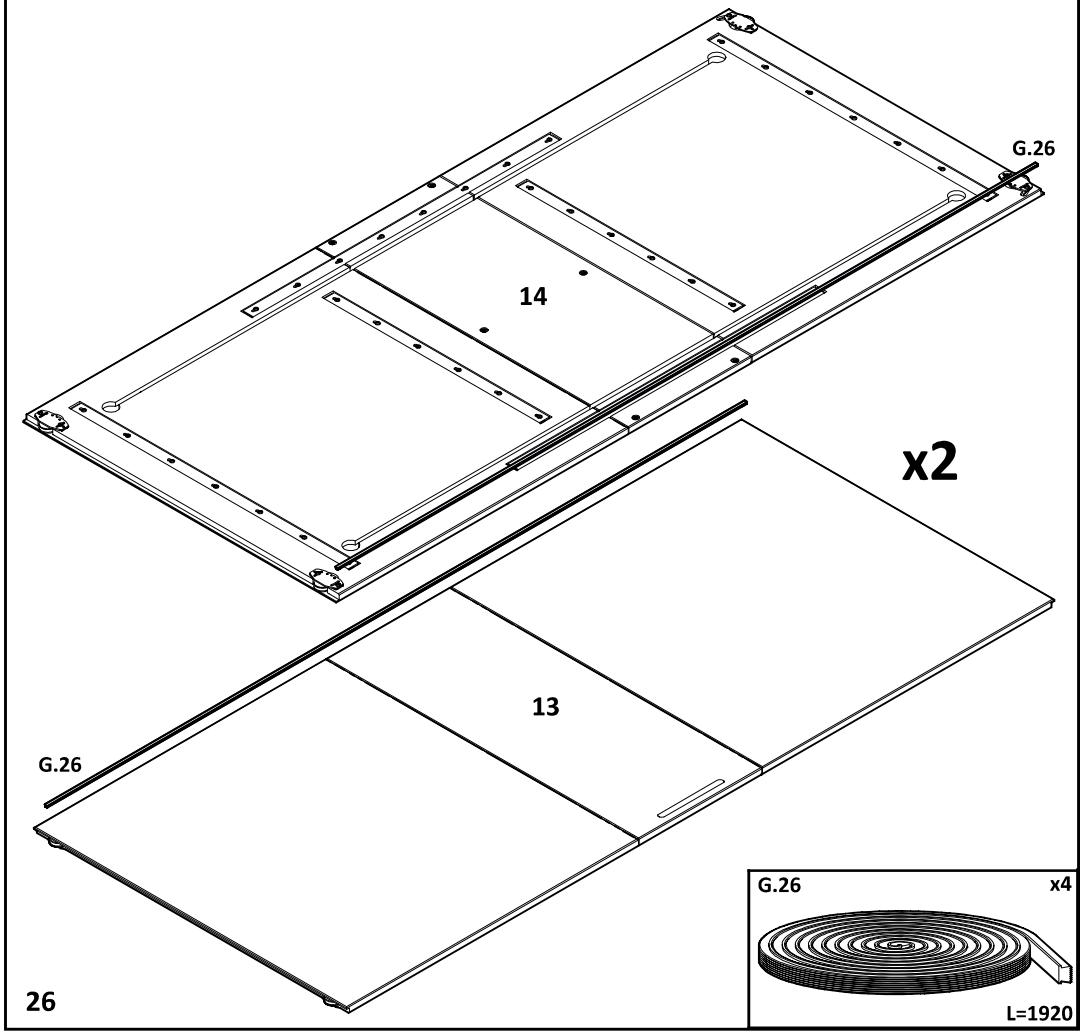
G.26
14
x2
13
G.26

G.26
x4
L=1920

26

24

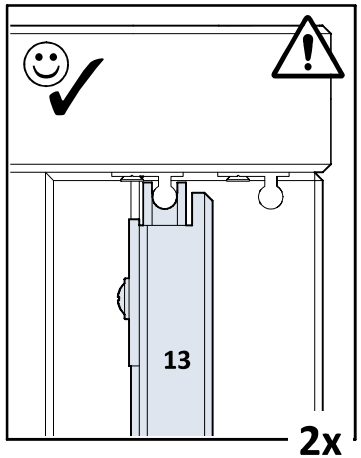

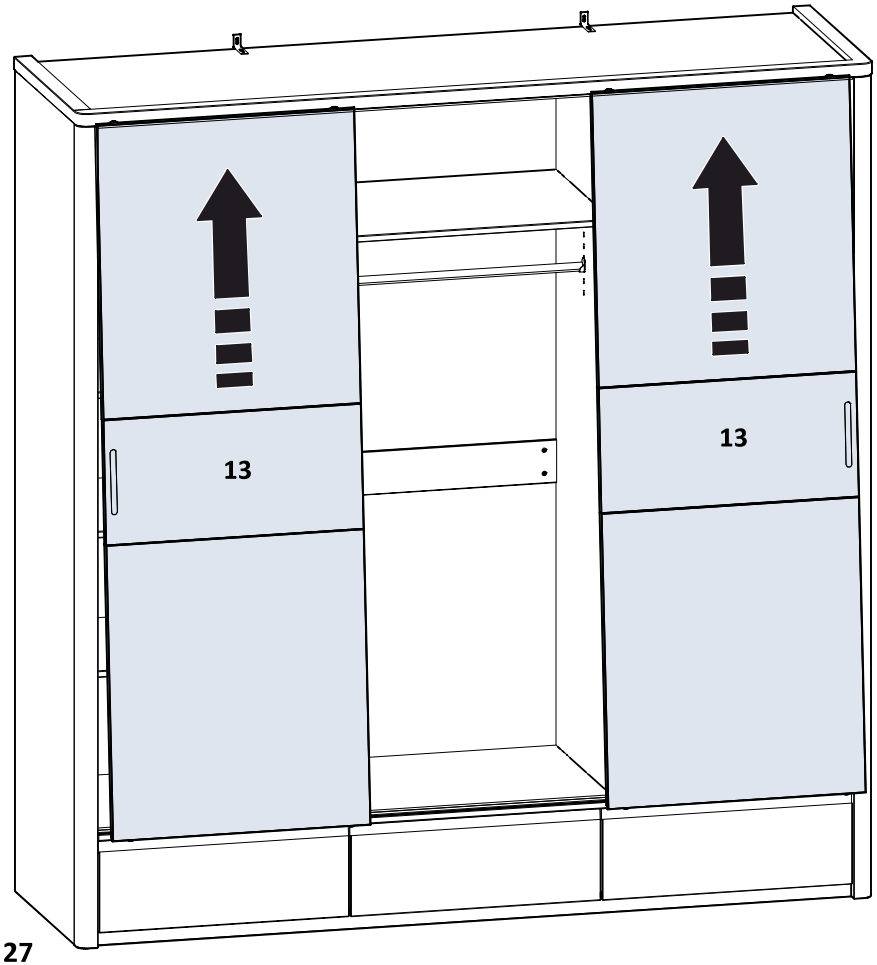

25

